SAF-HOLLAND Group

HOLLAND Landing Gear and Accessories

Parts Catalog

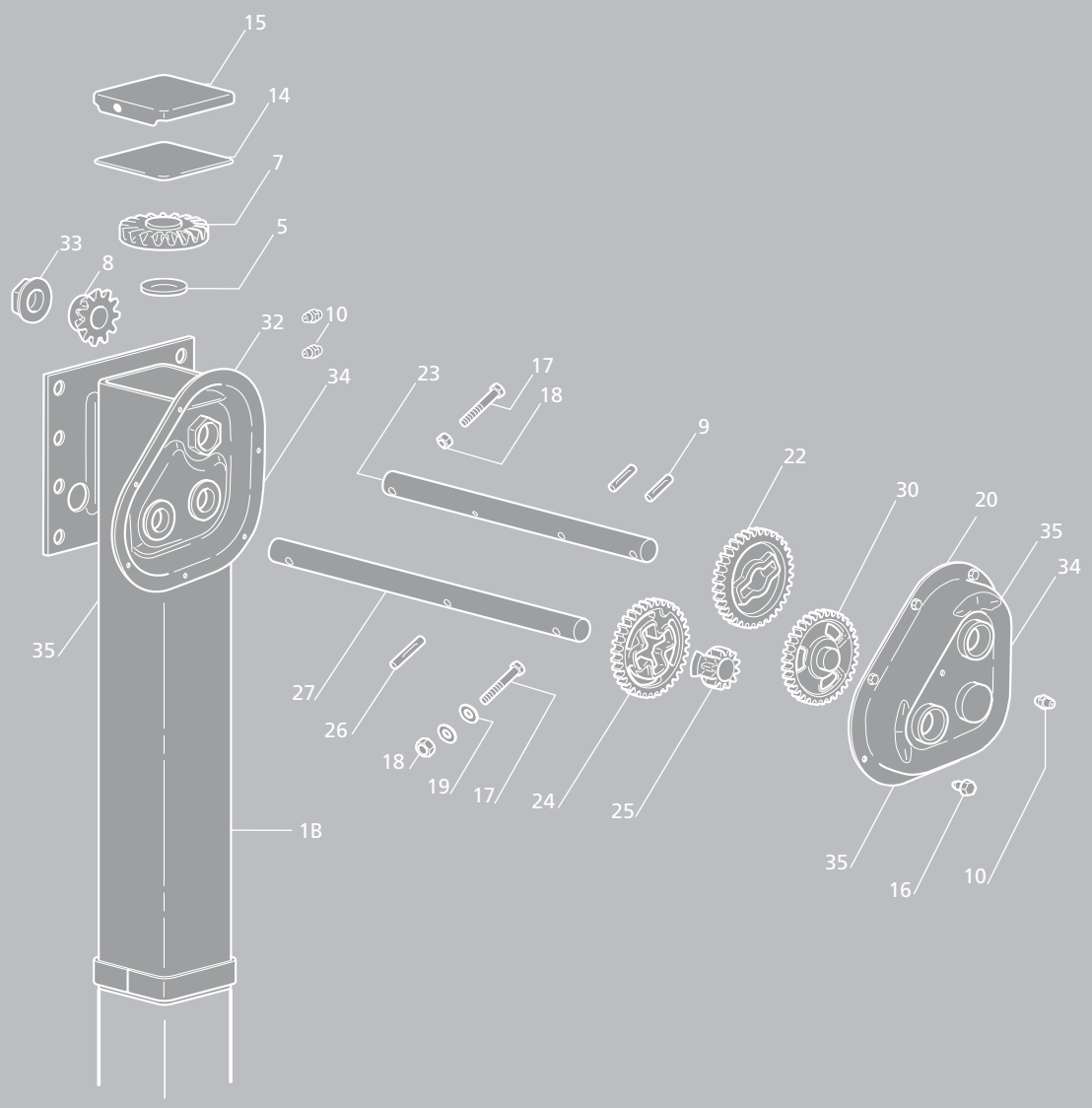

XL-LG11389PM-en-US Rev F

SAF Holland ORIGINAL PARTS™

HOLLAND LANDING GEAR PARTS REFERENCE GUIDE

TABLE OF CONTENTS

Landing Gear Model Identification 1-3
Trailer Jacks Model Identification 1-5
51000 Standard and NoLube 1-6
Atlas 55 Standard and NoLube 1-12
Atlas 65 Standard and NoLube 1-20
50000 Standard and NoLube 1-28
FG4000 Standard and NoLube 1-34
CMS2 1-40
CMS3 1-44
Classic 1-48
Mark V / Mark V HD 1-52
Dual-Pin Drop Leg 1-58
4700 & 4701 Series (before 09/2010) 1-60
4700 & 4701 Series 1-62
48000 Series 1-66
49000 Gooseneck 1-68
Anti-Nose Dive 1-70
JS150-SB 1-72
JS2000 Series 1-73
JS300 Series 1-74
Replacement Shafts 1-76
Replacement Gears 1-104

For parts, service, and warranty questions,
call 888.396.6501 or visit www.safholland.us

 Amendments and errors reserved. © SAF-HOLLAND, Inc.

THIS PAGE INTENTIONALLY LEFT BLANK

XL-LG11389PM-en-US Rev E 2013-10 Amendments and errors reserved. © SAF-HOLLAND, Inc.

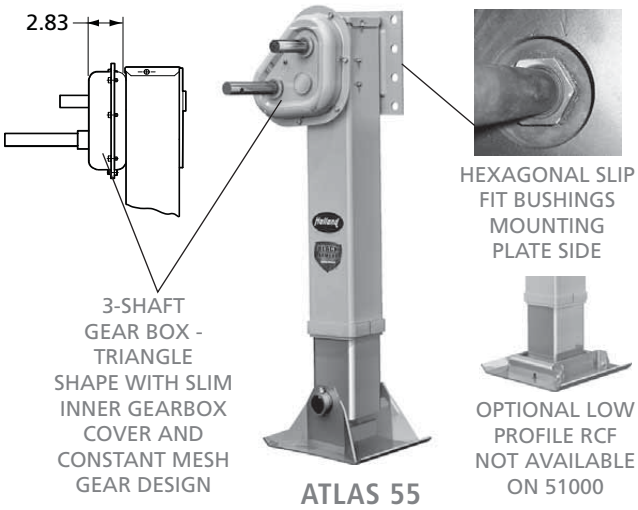

ATLAS 55

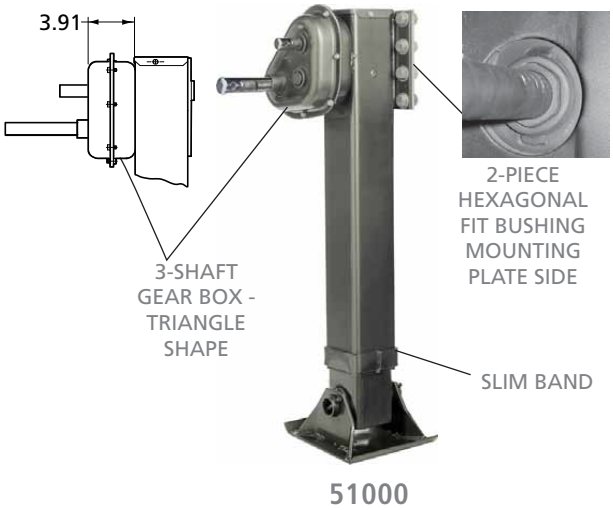

51000

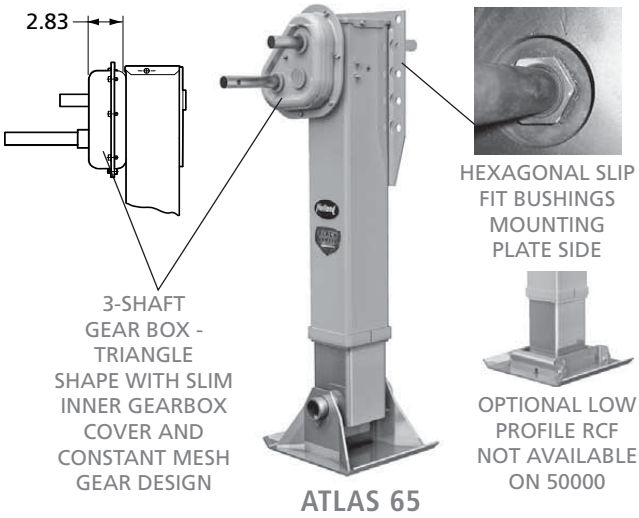

ATLAS 65

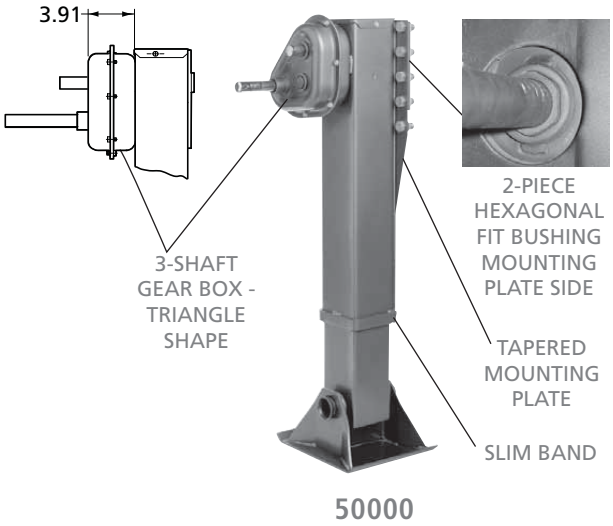

50000

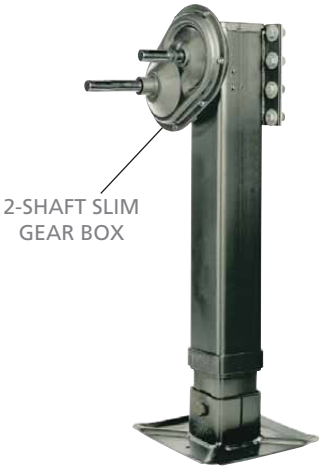

FG4000

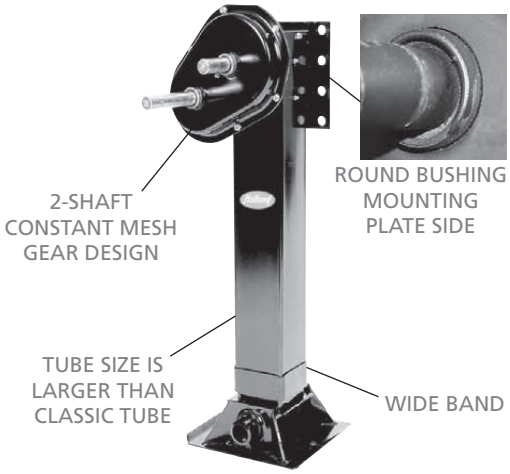

CMS2

 Amendments and errors reserved. © SAF-HOLLAND, Inc.

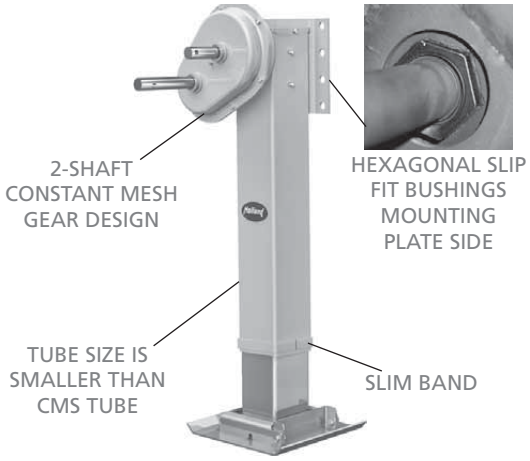

CLASSIC

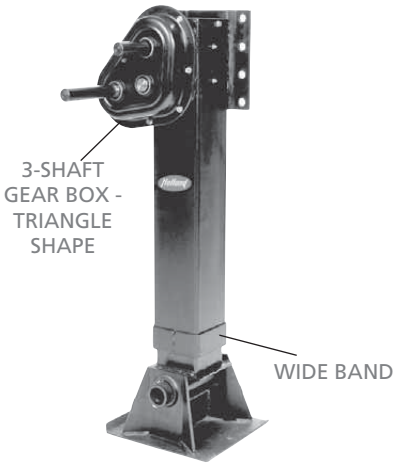

CMS3

MARK V

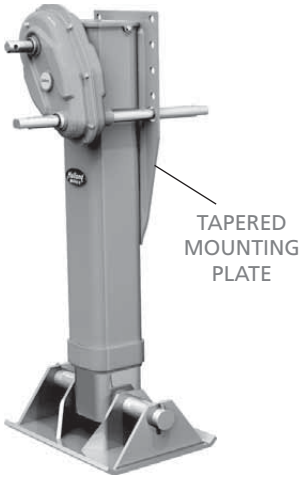

MARK V HD

XL-LG11389PM-en-US Rev F 08-2014 Amendments and errors reserved. © SAF-HOLLAND, Inc.

Dual-Pin Drop Leg

4700 Series

4701 Series

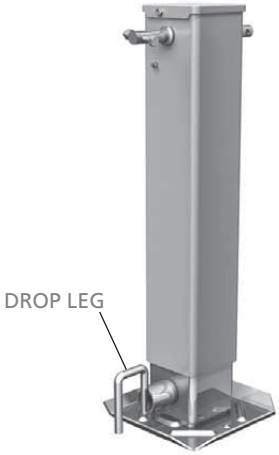

48000 Series

49000 Gooseneck

Anti-Nose Dive

JS150-SB

JS-2000

JS300

 Amendments and errors reserved. © SAF-HOLLAND, Inc.

SAF-HOLLAND Group

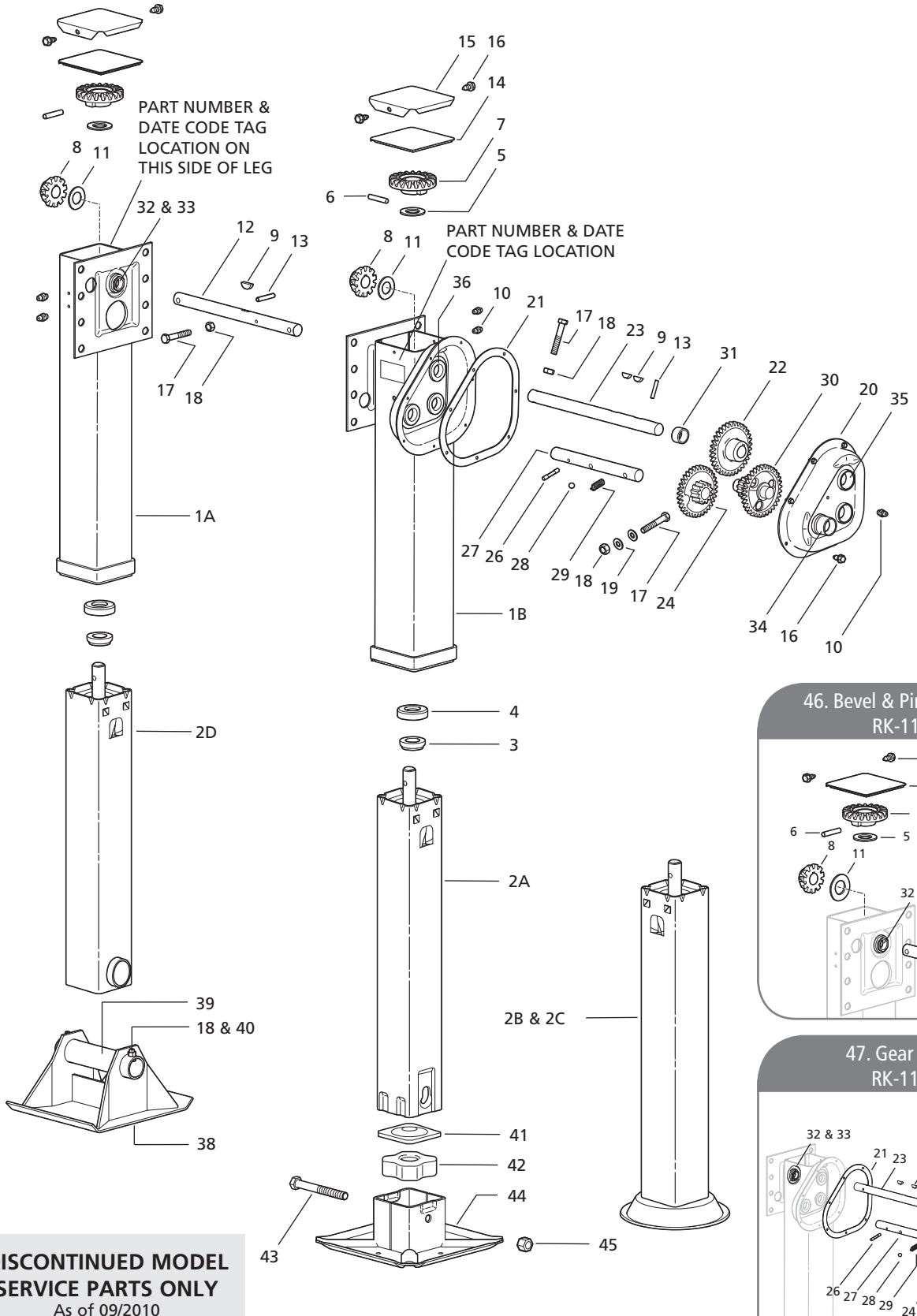

DISCONTINUED MODEL SERVICE PARTS ONLY
As of 09/2010
51000 model legs were replaced with the ATLAS 55 model.

46. Bevel & Pinion Gear Kit RK-11288

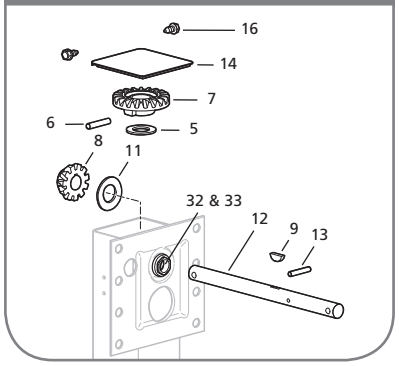

47. Gear Box Kit RK-11289

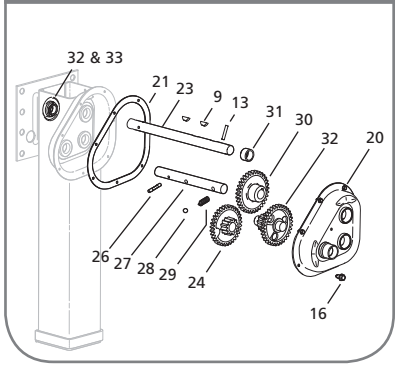

XL-LG11389PM-en-US Rev F 08-2014 Amendments and errors reserved. © SAF-HOLLAND, Inc.

NO.	DESCRIPTION	PART NO.	SPEED	
			ONE	TWO
1A	Upper Housing LH	N/A	1	-
1B	Upper Housing RH	N/A	-	1
2A	Retract Tube - RCF	N/A	1	1
2B	Retract Tube - 10" Shockfoot	N/A	1	1
2C	Retract Tube - 12" Shockfoot	N/A	1	1
2D	Retract Tube - Axle	N/A	1	1
3	Collar	XB-LG0544	1	1
4	Thrust Bearing	XB-BRG-013-77	1	1
5	Washer - FL 2"OD x 1.19" ID x .13" THK	XB-PW-016-62	1	1
6	Pin - DIA .38"x 2"	XA-CRP-V-06635	1	1
7	Bevel Gear	XA-LG0570-01	1	1
8	Pinion Gear	XB-LG1823-01	1	1
9	Key - Woodruff .25" x .88"	XB-KEY-018-02	1	2
10	Ftg - Grease .25"-28 Self Tapping	XB-GRF-022-16	2	3
11	Washer - Fl 1.8"OD x 1.01"ID x .06" THK	XB-PW-016-19	1	1
12	Jack Shaft LH - Universal Mount	LG0927	1	-
	- I-Beam Mount	LG0946	1	-
	- Conventional Mount	LG0946-02	1	-
	- Reverse Mount	LG0948	1	-
13	Pin - Spring DIA .25" x 1.5"	XB-SP-014-27	1	1
14	Gasket	XB-LG0893	1	1
15	Cover	XA-LG0880	1	1
16	Self-Tapping Screw .25"-20 x .5" Lg	XB-STS-008-11	2	9
17	Screw, Hex Cap .38"-16 x 2.25"Lg GR5	XB-HHC-050-42	1	2
18	Self-Locking Nut .38"-16	XB-SLN-012-04	2	3
19	Washer .38" Std Type A	XB-PW-016-03	-	2
20	Gearbox Half, - Outside w/Hole for Grease Fitting	LG0663	-	1
	- Outside w/Grease Fitting Included	XB-LG0663	-	1
21	Gearbox Gasket	XB-LG0428	-	1
22	Output Gear	LG0543-01	-	1
23	Jackshaft RH - Universal	LG0928	-	1
	- I-Beam Mount	LG0947	-	1
	- Conventional Mount	LG0947-02	-	1
	- Reverse Mount	LG0949	-	1
24	Input Gear- High & Low	LG0541-01	-	1
26	Groove Pin, Type E DIA .25"x 1.50" Lg	XB-GP-014-07	-	1
27	Shift Shaft - Universal Mount	LG0261-01	-	1
	- I-Beam & Conventional Mount	LG0371-01	-	1
	- Reverse Mount	LG0437	-	1
28	Shift Lock Ball	XB-BAL-023-07	-	1
29	Shift Lock Spring	XB-SPG-020-36	-	1
30	Idler Gear	XB-LG0542-01	-	1
31	Spacer Bushing	XB-LG0219-01	-	1
32	Retainer, Hex Lock	LG2094	2	1
33	Hex Lock Boss	LG2095	2	1
34	Shift Lock Boss	XB-LG0658-01	-	1
35	Gearbox Boss	XB-LG0659-01	-	4
36	Gearbox Boss, Inside Half	XB-LG0660	-	1

NO.	DESCRIPTION	PART NO.	SPEED	
			ONE	TWO
38	Sandshoe - 10" x 10" x 4.50"	50616001	1	1
	- 10" x 12" x 4.50"	50616000	1	1
	- 10" x 10" x 2.00"	50616008	1	1
	- 10" x 12" x 2.00"	50616007	1	1
39	Sandshoe Axle - Hollow Axle 8.50" Lg	LG0070-02	1	1
40	Screw, Hex Cap .38"-16 x .75" Lg GR5	XB-HHC-050-69	1	1
41	Cushion Foot Plate	LG0725	1	1
42	Cushion Foot Rubber	XB-LG0726	1	1
43	Bolt - Hex Head .63" -11 x 5.50"	XB-HHB-050-70	1	1
44	R.C.F. - DIA 10"	LG0718-01	1	1
	- DIA 12"	LG0740-01	1	1
	- 10" x 10"	LG0732-01	1	1
45	Self-Locking Nut - .63"-11	XB-SP0012-10	1	1
46	Bevel & Pinion Gear Repair Kit	RK-11288	1	1
47	Gear Box Repair Kit	RK-11289	-	1

For technical assistance please go to www.safholland.us or call 800.876.3929

 Amendments and errors reserved. © SAF-HOLLAND, Inc.

SAF-HOLLAND Group

NoLube™

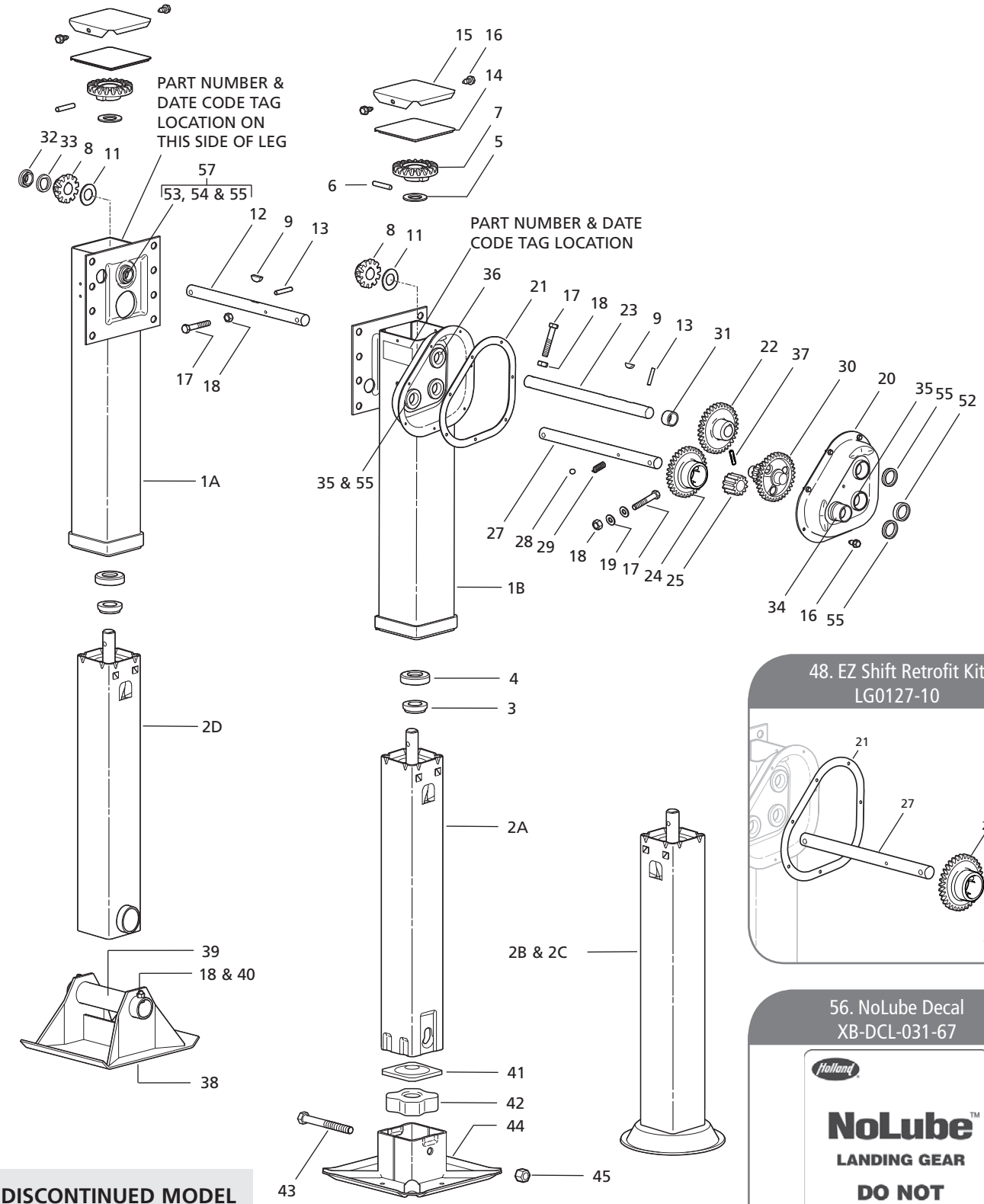

DISCONTINUED MODEL SERVICE PARTS ONLY
As of 09/2010
51000 model legs were replaced with the ATLAS 55 model.

48. EZ Shift Retrofit Kit
LG0127-10

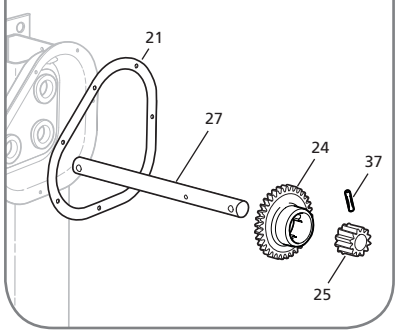

56. NoLube Decal
XB-DCL-031-67

XL-LG11389PM-en-US Rev F 08-2014 Amendments and errors reserved. © SAF-HOLLAND, Inc.

NO.	DESCRIPTION	PART NO.	SPEED	
			ONE	TWO
1A	Upper Housing LH	N/A	1	-
1B	Upper Housing RH w/Gearbox half	N/A	-	1
2A	Retract Tube Ass'y - RCF	N/A	1	1
2B	Retract Tube Ass'y - DIA 10 Shock Foot	N/A	1	1
2C	Retract Tube Ass'y - DIA 12 Shock Foot	N/A	1	1
2D	Retract Tube Ass'y - Axle Socket	N/A	1	1
3	Collar	XB-LG0544	1	1
4	Thrust Bearing	XB-BRG-013-77	1	1
5	Washer - FL 2"OD x 1.19" ID x .13" THK	XB-PW-016-62	1	1
6	Pin - Grooved .38" DIA x 2"	XA-CRP-V-06635	1	1
7	Bevel Gear	XA-LG0570-01	1	1
8	Pinion Gear	XB-LG1823-01	1	1
9	Key - Woodruff .25" x .88"	XB-KEY-018-02	1	2
11	Washer - Fl 1.88"OD x 1.022"ID x .06"THK	XB-PW-016-19	1	1
12	Jack Shaft LH - Universal Mount	LG0927	1	-
	- I-Beam Mount	LG0946	1	-
	- Conventional Mount	LG0946-02	1	-
	- Reverse Mount	LG0948	1	-
13	Pin - Spring DIA .25" x 1.50"	XB-SP-014-27	1	1
14	Gasket	XB-LG0893	1	1
15	Cover	XA-LG0880	1	1
16	Self-Tapping Screw - .25"-20 x .50" Lg.	XB-STS-008-11	2	9
17	Screw, Hex Cap .38" -16 x 2.25"Lg GR5	XB-HHC-050-42	1	2
18	Self-Locking Nut .38" -16	XB-SLN-012-04	2	3
19	Washer .38" Std Type A	XB-PW-016-03	-	2
20	Gearbox Half Assy - Outside - Sealed	LG0663-11	-	1
	Gearbox Half Assy - Outside - Sealed - w/Grease Fitting Hole - No Grease Fitting	LG0663-10	-	1
21	Gearbox Gasket	XB-LG0428	-	1
22	Output Gear	LG0543-01	-	1
23	Jackshaft RH - Universal Mount	LG0928	-	1
	- I-Beam Mount	LG0947	-	1
	- Conventional Mount	LG0947-02	-	1
	- Reverse Mount	LG0949	-	1
24	Input Gear - High	XD-LG0856	-	1
25	Input Gear - Low	XB-LG0857-01	-	1
27	Shift Shaft - Universal EZ Shift	LG0861-01	-	1
	- I-Beam & Conventional EZ Shift	LG0859-01	-	1
	- Reverse EZ Shift	LG0858	-	1
28	Shift Lock Ball	XB-BAL-023-07	-	1
29	Shift Lock Spring	XB-SPG-020-36	-	1
30	Idler Gear	XB-LG0542-01	-	1
31	Spacer Bushing	XB-LG0219-01	-	1
32	Retainer, Hex Lock	XB-LG1570	1	-
33	Hex Lock Boss w/Seals	LG0559-10	1	-
34	Shift Lock Boss	XB-LG0658-01	-	1
35	Gearbox Boss	XB-LG0659-01	-	4
36	Gearbox Boss, Inside Half	XB-LG0660	-	1
37	Groove Pin - .25" x 1.25" Type E	XB-GP-052-22	-	1

NO.	DESCRIPTION	PART NO.	SPEED	
			ONE	TWO
38	Sandshoe - 10" x 10" x 4.50"	50616001	1	1
	- 10" x 12" x 4.50"	50616000	1	1
	- 10" x 10" x 2.00"	50616008	1	1
	- 10" x 12" x 2.00"	50616007	1	1
39	Sandshoe Axle - Hollow Axle 8.50" Lg	LG0070-02	1	1
40	Screw, Hex Cap .38"-16 x .75" Lg GR5	XB-HHC-050-69	1	1
41	Cushion Foot Plate	LG0725	1	1
42	Cushion Foot Rubber	XB-LG0726	1	1
43	Bolt - Hex Head .63" -11 x 5.50"	XB-HHB-050-70	1	1
44	R.C.F. - DIA 10"	LG0718-01	1	1
	- DIA 12"	LG0740-01	1	1
	- 10" x 10"	LG0732-01	1	1
45	Self-Locking Nut - .63"-11	XB-SP0012-10	1	1
48	EZ Shift Retrofit Kit	LG0127-10	-	1
52	Freeze Plug	XB-SEL-030-22	-	1
53	Bushing	XB-LG0219-02	1	1
54	Short Boss	LG1326	1	1
55	Oil Seal	XB-SEL-030-17	1	4
56	NoLube Decal	XB-DCL-031-67	-	1
57	Bearing Boss Assy w/Oil Seal	LG1367-10	1	1

For technical assistance please go to www.safholland.us or call 800.876.3929

 Amendments and errors reserved. © SAF-HOLLAND, Inc.

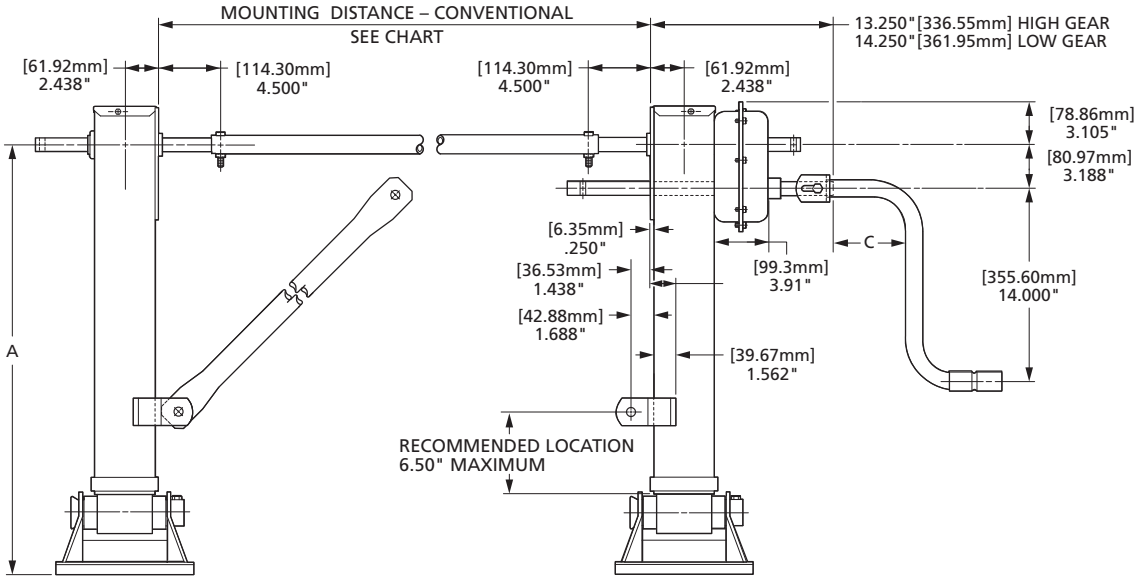

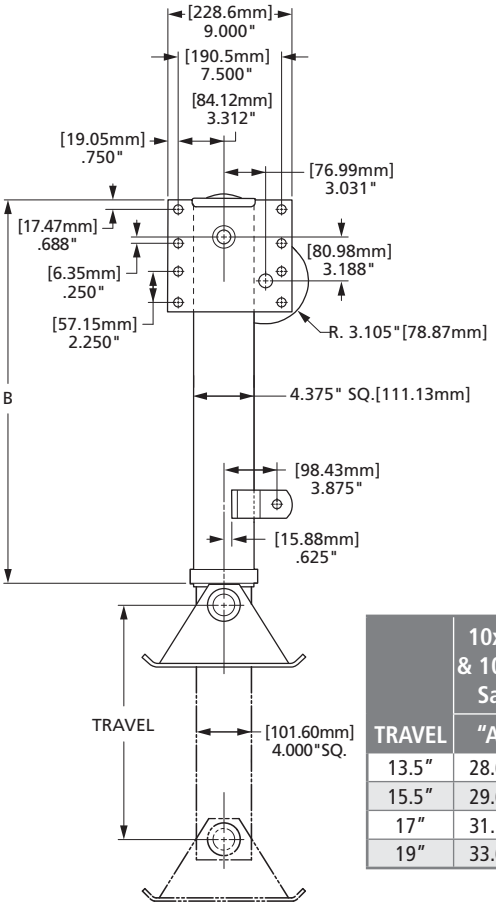

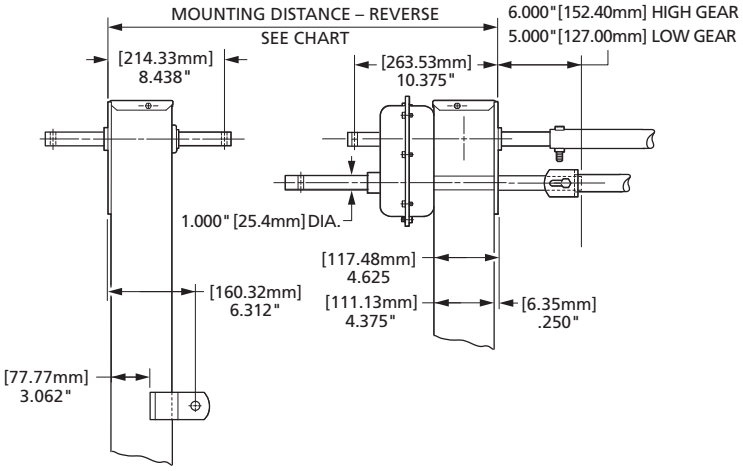

51000 DIMENSIONS

TRAVEL	10x10x4.50 & 10x12x4.50 Sandshoe		10x10x2 & 10x12x2 Sandshoe		SHOCKFOOT		SHOCKFOOT SHOCK CAN		R.C.F. - STD		R.C.F - MRL		CRANK PART NO.	"C"
	"A"	"B"	"A"	"B"	"A"	"B"	"A"	"B"	"A"	"B"	"A"	"B"		
13.5"	28.69	25.56	26.19	25.56	29.00	28.56	N/A	N/A	27.25	25.56	27.25	25.56	LG0083-01	5.25
15.5"	29.69	26.56	27.19	26.56	N/A	N/A	N/A	N/A	28.25	26.56	28.25	26.56	LG0083-03	10.88
17"	31.19	28.06	28.69	28.06	31.75	30.06	28.75	28.06	31.75	30.06	29.75	28.06		
19"	33.69	30.06	31.19	30.06	34.25	30.56	N/A	N/A	32.38	30.06	N/A	N/A	LG0083-05	16.88

MOUNTING DISTANCES

REVERSE MOUNTING DISTANCE	96" WIDE TRAILER	102" WIDE TRAILER
Maximum	84.00	90.00
Minimum - LG0083-01	78.00	84.00
Minimum - LG0083-03	66.75	72.75
Minimum - LG0083-05	54.75	60.75

CONVENTIONAL MOUNTING DISTANCE	96" WIDE TRAILER	102" WIDE TRAILER
Maximum	67.50	73.50
Minimum - LG0083-01	61.50	67.50
Minimum - LG0083-03	50.25	56.25
Minimum - LG0083-05	38.25	44.25

XL-LG11389PM-en-US Rev F 08-2014 Amendments and errors reserved. © SAF-HOLLAND, Inc.

LG4 code number was converted to ATLAS 55 starting September 2010

Ordering Code provided for reference only.

LANDING GEAR	
NO.	MODEL
LG4	51000

MOUNTING	
NO.	DESCRIPTION
0	Univ. Mt. - .66"
1	Conv. Mt. - .66"
4	I-Beam Mt. - .66"
8	Reverse Mt. - .66"
9	Special
A	Univ. Mt. - .53"
B	Conv. Mt - .53"
H	I-Beam Mt. - .53"
L	Reverse Mt. - .53"

SHAFTS	
NO.	DESCRIPTION
0	Universal
1	Reverse
2	I-Beam
9	Conventional
A	I-Beam - 10"
J	Universal EZ-Shift
K	Conventional EZ-Shift
L	Reverse EZ-Shift
M	I-Beam EZ-Shift

FOOTWARE	
NO.	DESCRIPTION
0	No Footware
1	Sandshoe - 4.50"x 10" x 10"
2	Sandshoe - 4.50"x 10"x 12"
3	Sandshoe - 2" x 10" x 10"
4	Sandshoe - 2" x 10" x 12"
5	Shockfoot - DIA 12"
8	Shockfoot - DIA 10"
A	R.C.F. - No Footware
B	R.C.F. - 10" x 10"
C	R.C.F. - DIA 10"
D	R.C.F. - DIA 12"
M	Sandshoe HD - 4.50"x 12"x 12"
R	R.C.F. - 12" x 12"

LG4 X X X - X X X X X X X X X

TRAVEL	
NO.	DESCRIPTION
3	13.50"
5	15.50"
7	17"
9	19"

LEG ASSY	
NO.	DESCRIPTION
0	Sets
1	Left Hand
2	Right Hand

RETRACT TUBE	
NO.	DESCRIPTION
0	Standard
5	R.C.F MRL
6	Shock Can
9	Special

GREASE	
NO.	DESCRIPTION
0	Standard Pack
3	Full Pack - GB & HD
7	Std. Pack & PermaLube
9	Special
Q	NoLube (Permanently Lubricated)
R	NoLube Per Block "Q" & Enhanced Screw Lube
S	10 Year Warranty Per Block "Q" & LG0128 - Shockfoot or RCF Req'd.
T	10 Year Warranty Per Block "S" - Enhanced Lubrication On Screw

LOG NO.	ACCESSORY NO.
Contact SAF-HOLLAND Customer Service for Special Options & Accessories	

 Amendments and errors reserved. © SAF-HOLLAND, Inc.

SAF-HOLLAND Group

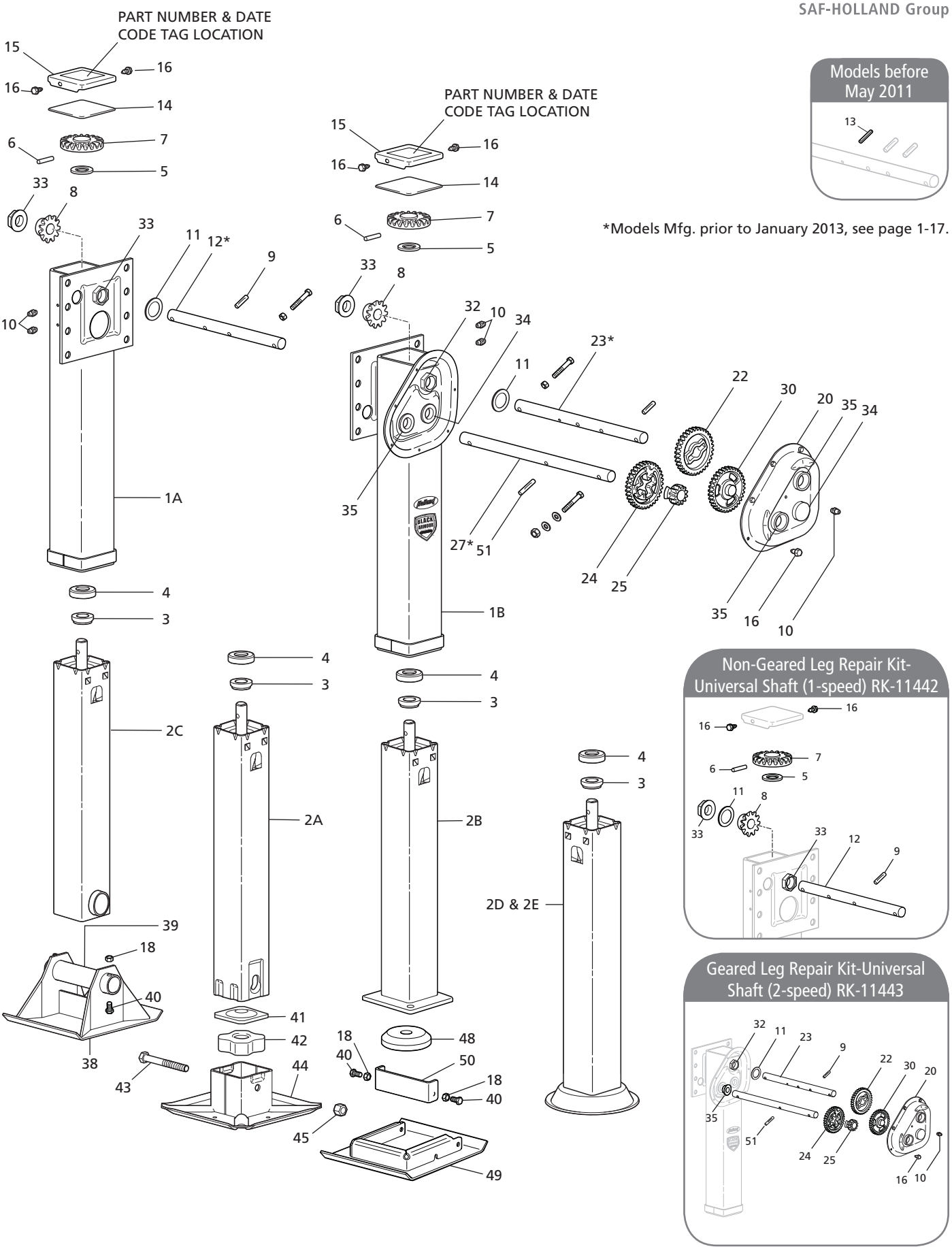

XL-LG11389PM-en-US Rev F 08-2014 Amendments and errors reserved. © SAF-HOLLAND, Inc.

NO.	DESCRIPTION	RETRACT TUBE CODE	TRAVEL					
			13.50"	15.50"	17"	17"CAN.	17" MRL	19"
2A	Retract Tube - RCF	0 or 5 (MRL)	LG3053-01	LG3053-02	LG3053-04	N/A	LG3053-03	LG3053-05
2B	Retract Tube - Low Profile RCF	0	LG3097-01	LG3097-02	LG3097-03	N/A	N/A	NA
2C	Retract Tube - Axle	0	LG3012-01	LG3012-02	LG3012-03	N/A	N/A	LG3012-04
2D	Retract Tube - Shockfoot 10" DIA	0,6 (CAN) or B	LG3061-02	LG3061-03	LG3061-04	LG3061-07	LG3061-10	LG3061-13
2E	Retract Tube - Shockfoot 12" DIA	0,6 (CAN) or B	LG3061-01	N/A	LG3061-05	LG3061-08	LG3061-11	LG3061-14

NO.	DESCRIPTION	PART NO.	SPEED	
			ONE	TWO
1A	Upper Housing LH	N/A	-	-
1B	Upper Housing RH	N/A	-	-
3	Collar	XB-LG0544	1	1
4	Thrust Bearing	XB-BRG-013-77	1	1
5	Washer - FL 2"OD x 1.19" ID x .13" THK	XB-PW-016-62	1	1
6	Pin - DIA .38"x 2"	XA-CRP-V-06635	1	2
7	Bevel Gear	LG2884	1	1
8	Pinion Gear	LG1823-02	1	1
9	Groove Pin - DIA .38" x 1.50"	XB-GP-014-18	1	1
10	Ftg - Grease .25"-28 Self Tapping	XB-GRF-022-16	2	3
11	O-Ring, #319	2024100000100	1	1
12	Jack Shaft LH - Universal Mount	LG2964-01	1	-
	- I-Beam Mount, 6.50"	LG2964-04	1	-
	- I-Beam Mount, 10.00"	LG2964-05	1	-
	- Conventional Mount	LG2964-02	1	-
	- Reverse Mount	LG2964-03	1	-
13	Pin - Spring DIA .25" x 1.5" (Not Required)	N/A	-	-
15	Top Cover	2111100004080	1	1
16	Self-Tapping Screw .25"-20 x .5" Lg	XB-STS-008-11	2	9
17	Screw, Hex Cap .38"-16 x 2.25"Lg GR5	XB-HHC-050-42	1	2
18	Self-Locking Nut .38"-16 - Sandshoe	XB-SLN-012-04	2	3
	- Low Profile RCF	XB-SLN-012-04	3	4
	- RCF		1	2
19	Washer .38" Std Type A	XB-PW-016-03	-	2
20	Gearbox Half, Outside w/Hole for Grease Fitting	LG2996	-	1
22	Output Gear	LG2980	-	1
23	Jackshaft RH - Universal Mount	LG2963-01	-	1
	- I-Beam Mount, 6.50"	LG2963-04	-	1
	- I-Beam Mount, 10.00"	LG2963-05	-	1
	- Conventional Mount	LG2963-02	-	1
	- Reverse Mount	LG2963-03	-	1
24	Gear, Drive, High Speed - Machined	2040100000060	-	1
25	Gear, Drive, Low Speed - Machined	2040100000050	-	1
26	Groove Pin, Type E DIA .38" x 2.00" Lg	XB-GP-052-21	-	1
27	Shift Shaft - Universal	2111100003400	-	1
	- I-Beam & Conventional	2111100003410	-	1
	- Reverse	2111100003420	-	1
30	Idler Gear	LG2975	-	1
32	Boss, Hex Lock - Oversized	2022100000180	-	1
33	Hex Lock Boss - Sealed	LG2926-10	2	1
34	Idler Shaft Bushing (Included in Item #23)	LG3005	-	2
35	Boss Bearing - Sealed (Included in Item #20)	LG0659-10	-	3

NO.	DESCRIPTION	PART NO.	SPEED	
			ONE	TWO
38	Sandshoe - 10" x 10" x 4.50"	50616001	1	1
	- 10" x 12" x 4.50"	50616000	1	1
	- 10" x 10" x 2.00"	50616008	1	1
	- 10" x 12" x 2.00"	50616007	1	1
39	Sandshoe Axle - Hollow Axle 8.50" Lg	LG0070-02	1	1
40	Screw, Hex Cap .38"-16 x .75" Lg GR5 - Sandshoe	XB-HHC-050-69	1	1
	Screw, Hex Cap .38"-16 x .75" Lg GR5 - Low Profile RCF	XB-HHC-050-69	2	2
41	Cushion Foot Plate	LG0725	1	1
42	Cushion Foot Rubber	XB-LG0726	1	1
43	Bolt - Hex Head .63" -11 x 5.50"	XB-HHB-050-70	1	1
44	R.C.F. - DIA 10"	LG0718-01	1	1
	- DIA 12"	LG0740-01	1	1
	- 10" x 10"	LG0732-01	1	1
45	Self-Locking Nut - .63"-11"	XB-SP0012-10	1	1
48	Cushion Foot Pad - Low Profile RCF	728003	1	1
49	Interchangeable Collar - Low Profile RCF	730640	1	1
50	Interchangeable Strap	730638	1	1
51	Pin Groove, .31" Dia. x 2.00" Lg	XB-GP-052-52	-	1

For technical assistance please go to www.safholland.us or call 800.876.3929

 Amendments and errors reserved. © SAF-HOLLAND, Inc.

SAF-HOLLAND Group

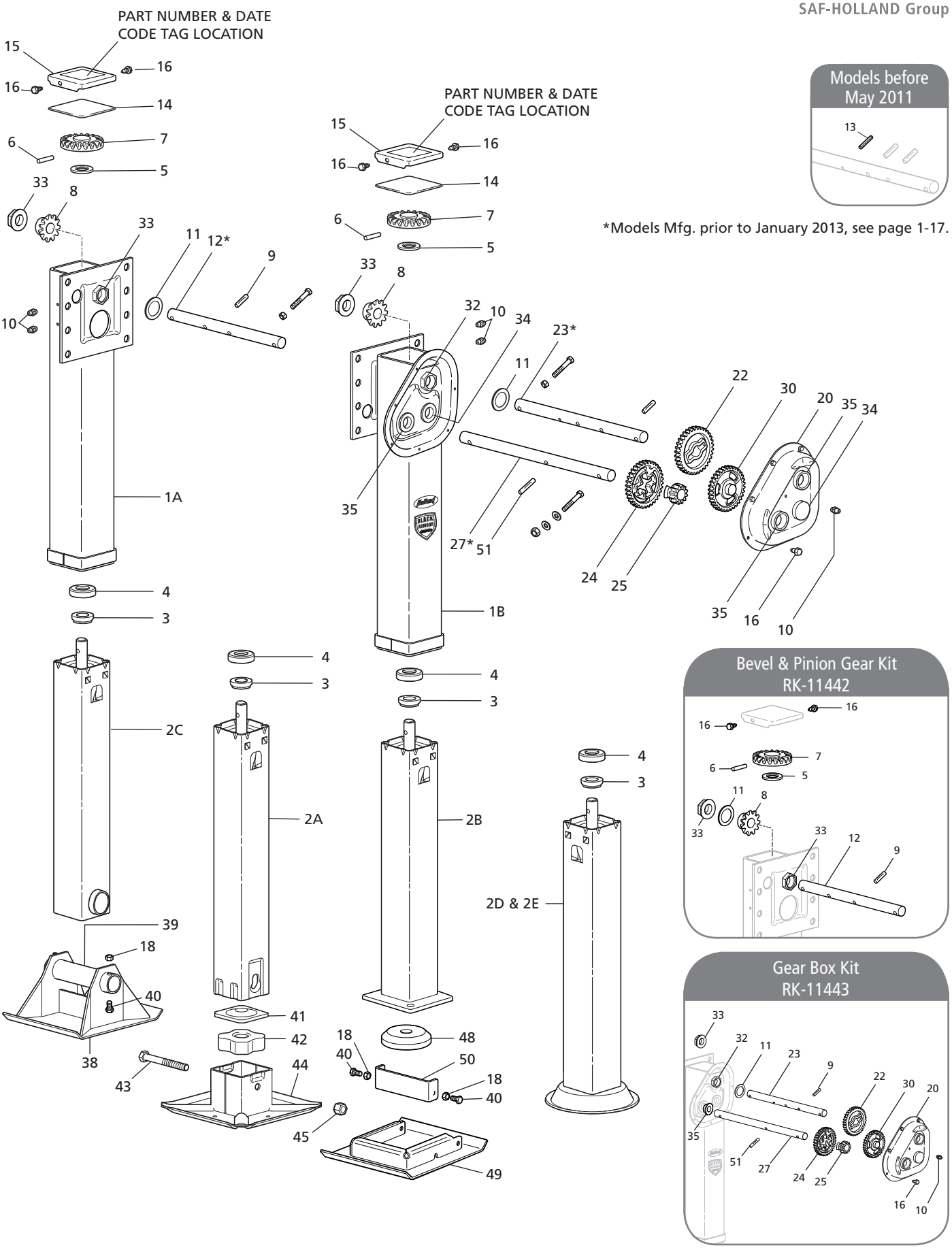

XL-LG11389PM-en-US Rev F 08-2014 Amendments and errors reserved. © SAF-HOLLAND, Inc.

NO.	DESCRIPTION	RETRACT TUBE CODE	TRAVEL					
			13.50"	15.50"	17"	17" *CAN.	17" MRL	19"
2A	Retract Tube - RCF	0 or 5 (MRL)	LG3071-01	LG3071-02	LG3071-04	N/A	LG3071-03	LG3071-05
2B	Retract Tube - Low Profile RCF	0	LG3097-11	LG3097-12	LG3097-13	N/A	N/A	N/A
2C	Retract Tube - Axle	0	LG3077-01	LG3077-02	LG3077-03	N/A	N/A	LG3077-04
2D	Retract Tube - 10" DIA Shockfoot	0,6(CAN) or B	N/A	N/A	LG3095-01	LG3095-03	LG3095-06	LG3095-05
2E	Retract Tube - 12" DIA Shockfoot	0,6(CAN) or B	N/A	N/A	LG3095-02	LG3095-04	N/A	N/A

NO.	DESCRIPTION	PART NO.	SPEED	
			ONE	TWO
1A	Upper Housing LH	N/A	-	-
1B	Upper Housing RH	N/A	-	-
3	Collar	XB-LG0544	1	1
4	Thrust Bearing	XB-BRG-013-77	1	1
5	Washer - FL 2"OD x 1.19" ID x .13" THK	XB-PW-016-62	1	1
6	Pin - DIA .38"x 2"	XA-CRP-V-06635	1	2
7	Bevel Gear	LG2884	1	1
8	Pinion Gear	LG1823-02	1	1
9	Groove Pin - DIA .38" x 1.50"	XB-GP-014-18	1	1
10	Ftg - Grease .25"-28 Self Tapping	XB-GRF-022-16	2	3
11	O-Ring, #319	2024100000100	1	1
12	Jack Shaft LH - Universal Mount	LG2964-01	1	-
	- I-Beam Mount, 6.50"	LG2964-04	1	-
	- I-Beam Mount, 10.00"	LG2964-05	1	-
	- Conventional Mount	LG2964-02	1	-
	- Reverse Mount	LG2964-03	1	-
13	Pin - Spring DIA .25" x 1.5" (Not Required)	N/A	-	-
15	Top Cover	2111100004080	1	1
16	Self-Tapping Screw .25"-20 x .5" Lg	XB-STS-008-11	2	9
17	Screw, Hex Cap .38"-16 x 2.25"Lg GR5	XB-HHC-050-42	1	2
18	Self-Locking Nut .38"-16 - Sandshoe	XB-SLN-012-04	2	3
	- Low Profile RCF	XB-SLN-012-04	3	4
	- RCF		1	2
19	Washer .38" Std Type A	XB-PW-016-03	-	2
20	Gearbox Half, Outside w/Hole for Grease Fitting	LG2996	-	1
22	Output Gear	LG2980	-	1
23	Jackshaft RH - Universal Mount	LG2963-01	-	1
	- I-Beam Mount, 6.50"	LG2963-04	-	1
	- I-Beam Mount, 10.00"	LG2963-05	-	1
	- Conventional Mount	LG2963-02	-	1
	- Reverse Mount	LG2963-03	-	1
24	Gear, Drive, High Speed - Machined	2040100000060	-	1
25	Gear, Drive, Low Speed - Machined	2040100000050	-	1
26	Groove Pin, Type E DIA .38" x 2.00" Lg	XB-GP-052-21	-	1
27	Shift Shaft - Universal	2111100003400	-	1
	- I-Beam & Conventional	2111100003410	-	1
	- Reverse	2111100003420	-	1
30	Idler Gear	LG2975	-	1
32	Boss, Hex Lock - Oversized	2022100000180	-	1
33	Hex Lock Boss - Sealed	LG2926-10	2	1
34	Idler Shaft Bushing (Included in Item #23)	LG3005	-	2
35	Boss Bearing - Sealed (Included in Item #20)	LG0659-10	-	3

NO.	DESCRIPTION	PART NO.	SPEED	
			ONE	TWO
38	Sandshoe - 10" x 10" x 4.50"	50616001	1	1
	- 10" x 12" x 4.50"	50616000	1	1
	- 10" x 10" x 2.00"	50616008	1	1
	- 10" x 12" x 2.00"	50616007	1	1
39	Sandshoe Axle - Hollow Axle 8.50" Lg	LG0070-02	1	1
40	Screw, Hex Cap .38"-16 x .75" Lg GR5 - Sandshoe	XB-HHC-050-69	1	1
	Screw, Hex Cap .38"-16 x .75" Lg GR5 - Low Profile RCF	XB-HHC-050-69	2	2
41	Cushion Foot Plate	LG0725	1	1
42	Cushion Foot Rubber	XB-LG0726	1	1
43	Bolt - Hex Head .63" -11 x 5.50"	XB-HHB-050-70	1	1
44	R.C.F. - DIA 10"	LG0718-01	1	1
	- DIA 12"	LG0740-01	1	1
	- 10" x 10"	LG0732-01	1	1
45	Self-Locking Nut - .63"-11"	XB-SP0012-10	1	1
48	Cushion Foot Pad - Low Profile RCF	728003	1	1
49	Interchangeable Collar - Low Profile RCF	730640	1	1
50	Interchangeable Strap	730638	1	1
51	Pin Groove, .31" Dia. x 2.00" Lg	XB-GP-052-52	-	1

For technical assistance please go to www.safholland.us or call 800.876.3929

 Amendments and errors reserved. © SAF-HOLLAND, Inc.

Jack Shaft Conventional - LH
RK-11820-C

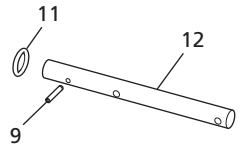

Jack Shaft Conventional - RH
RK-11820-C

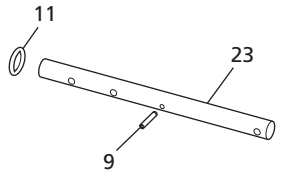

Conventional Shift Shaft
RK-11824-C

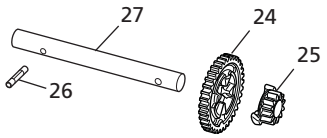

Jack Shaft I-Beam Mount 6.5" - LH
RK-11820-IL

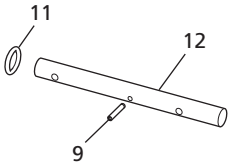

Jack Shaft I-Beam Mount 6.5" - RH
RK-11820-IL

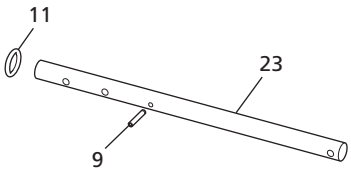

Jack Shaft I-Beam Mount 10.0" - LH
RK-11820-IS

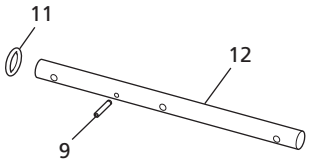

Jack Shaft I-Beam Mount 10.0" - RH
RK-11820-IS

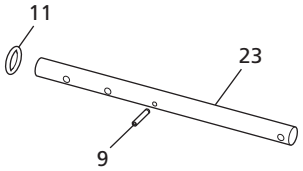

Jack Shaft - Reverse - LH
RK-11820-R

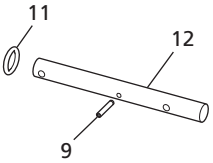

Jack Shaft - Reverse - RH
RK-11820-R

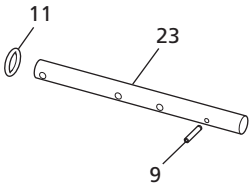

Reverse Shift Shaft
RK-11824-R

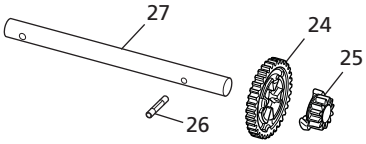

Jack Shaft Universal - LH
RK-11820-U

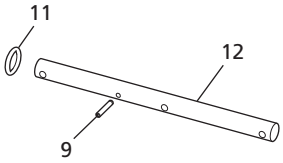

Jack Shaft Universal - RH
RK-11820-U

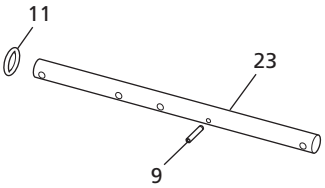

Universal Shift Shaft
RK-11824-U

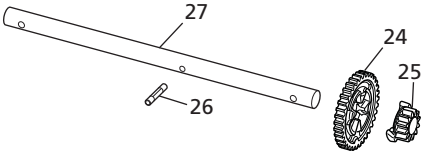

XL-LG11389PM-en-US Rev F 08-2014 Amendments and errors reserved. © SAF-HOLLAND, Inc.

For Models Prior to January 2013

* All Parts Sold Individually

Jack Shaft - LH

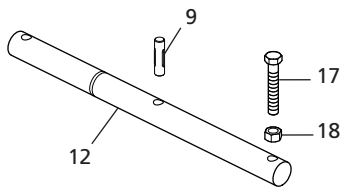

Jack Shaft - RH

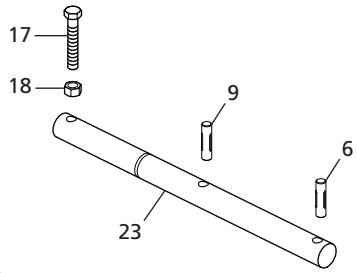

Shift Shaft

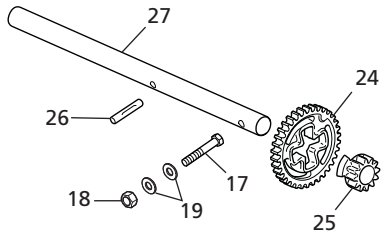

NO.	DESCRIPTION	PART NO.	SPEED	
			ONE	TWO
6	"Pin- DIA .38" x 2"	XA-CRP-V-06635	1	2
9	"Groove Pin- DIA .38" x1.50"	XB-GP-014-18	1	1
12	Jack Shaft - Universal Mount	2111100000430	1	-
	- Beam Mount- 6.5"	2111100000460	1	-
	- I-Beam Mount- 10.0"	2111100000470	1	-
	- Conventional Mount	2111100000440	1	-
	- Reverse Mount	2111100000450	1	-
17	"Screw, Hex Cap .38" -16 x 2.25" "Lg GR5"	XB-HHC-050-42	1	2
18	"Self Locking Nut .38" -16 - Sandshoe	XB-SLN-012-04	2	3
	- Low Profile RCF	XB-SLN-012-04	3	4
19	"Washer .38"" Std Type A"	XB-PW-016-03	-	2
23	Jack Shaft - Universal Mount	2111100000480	-	1
	- Beam Mount- 6.5"	211110000510	-	1
	- I-Beam Mount- 10.0"	2111100000520	-	1
	- Conventional Mount	2111100000490	-	1
	- Reverse Mount	2111100000500	-	1
24	Gear Drive, High Speed - Machined	2040100000060	-	1
25	Gear Drive, Low Speed - Machined	2040100000050	-	1
	"Pin,Groove .375x2" " Type E"	XB-GP-052-21	-	1

 Amendments and errors reserved. © SAF-HOLLAND, Inc.

SAF-HOLLAND Group

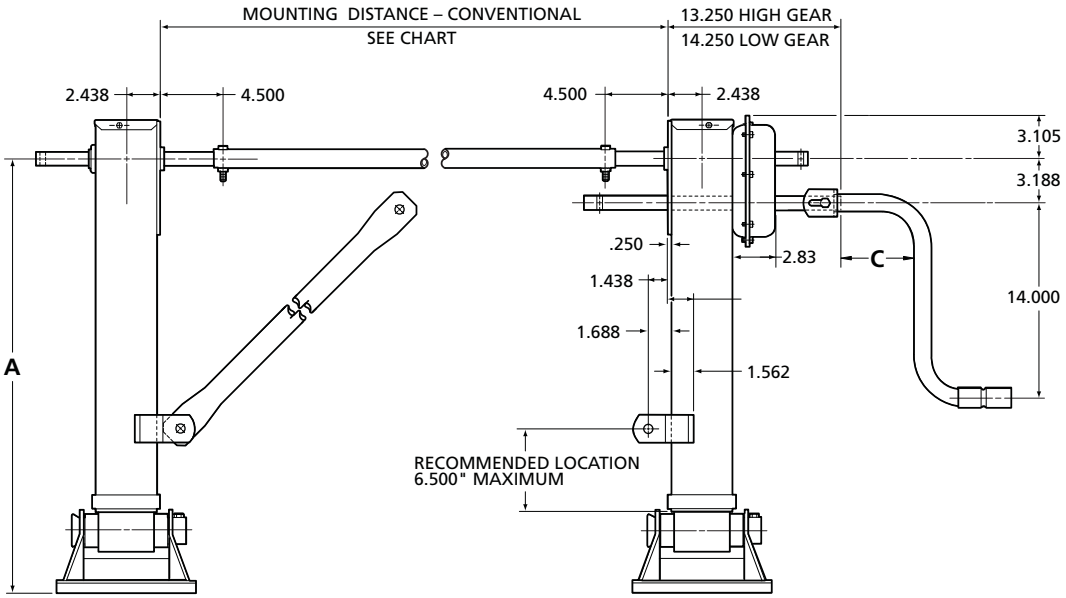

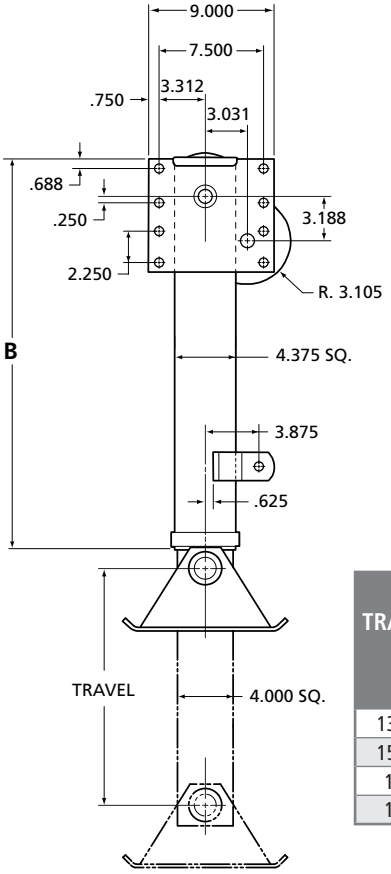

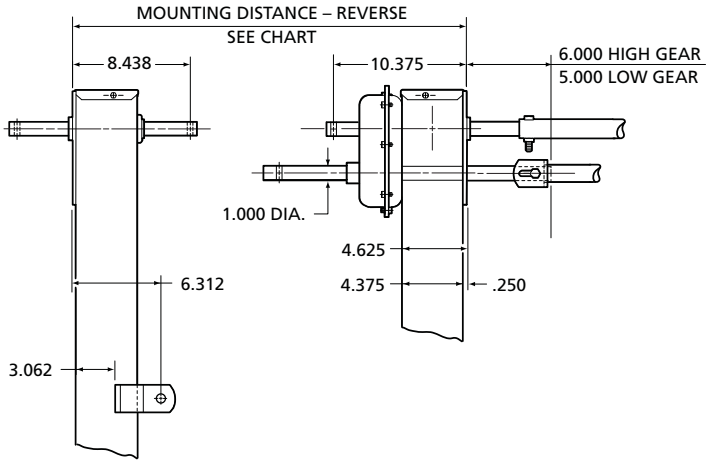

ATLAS 55 DIMENSIONS

TRAVEL	10x10x4.50 & 10x12x4.50 Sandshoe		10x10x2 & 10x12x2 Sandshoe		SHOCKFOOT		SHOCKFOOT SHOCK CAN		R.C.F. - STD		R.C.F - MRL		CRANK PART NO.	"C"
	"A"	"B"	"A"	"B"	"A"	"B"	"A"	"B"	"A"	"B"	"A"	"B"		
13.5"	28.69	25.56	26.19	25.56	29.00	28.56	N/A	N/A	27.25	25.56	27.25	25.56	LG0083-01	5.25
15.5"	29.69	26.56	27.19	26.56	N/A	N/A	N/A	N/A	28.25	26.56	28.25	26.56	LG0083-03	10.88
17"	31.19	28.06	28.69	28.06	31.75	30.06	28.75	28.06	31.75	30.06	29.75	28.06		
19"	33.69	30.06	31.19	30.06	34.25	30.56	N/A	N/A	32.38	30.06	N/A	N/A	LG0083-05	16.88

MOUNTING DISTANCES

REVERSE MOUNTING DISTANCE	96" WIDE TRAILER	102" WIDE TRAILER
Maximum	84.00	90.00
Minimum - LG0083-01	78.00	84.00
Minimum - LG0083-03	66.75	72.75
Minimum - LG0083-05	54.75	60.75

CONVENTIONAL MOUNTING DISTANCE	96" WIDE TRAILER	102" WIDE TRAILER
Maximum	67.50	73.50
Minimum - LG0083-01	61.50	67.50
Minimum - LG0083-03	50.25	56.25
Minimum - LG0083-05	38.25	44.25

XL-LG11389PM-en-US Rev F 08-2014 Amendments and errors reserved. © SAF-HOLLAND, Inc.

LANDING GEAR	
NO.	MODEL
LG4	ATLAS 55

MOUNTING	
NO.	DESCRIPTION
0	Univ. Mt. - .66"
1	Conv. Mt. - .66"
4	I-Beam Mt. - .66"
8	Reverse Mt. - .66"
9	Special
A	Univ. Mt. - .53"
B	Conv. Mt - .53"
H	I-Beam Mt. - .53"
L	Reverse Mt. - .53"

SHAFTS	
NO.	DESCRIPTION
0	Universal
1	Reverse
2	I-Beam
9	Conventional
A	I-Beam - 10"
J	Universal EZ-Shift
K	Conventional EZ-Shift
L	Reverse EZ-Shift
M	I-Beam EZ-Shift

FOOTWARE	
NO.	DESCRIPTION
0	No Footware
1	Sandshoe - 4.50"x 10" x 10"
2	Sandshoe - 4.50"x 10"x 12"
3	Sandshoe - 2" x 10" x 10"
4	Sandshoe - 2" x 10" x 12"
5	Shockfoot - DIA 12"
8	Shockfoot - DIA 10"
A	R.C.F. - No Footware
B	R.C.F. - 10" x 10"
C	R.C.F. - DIA 10"
D	R.C.F. - DIA 12"
M	Sandshoe HD - 4.50"x 12"x 12"
R	R.C.F. - 12" x 12"
S	RCF 10" x 10" Heavy Duty
Z	10" x 10" Low Profile RCF

LG4 X X X - X X X X X X X X X

TRAVEL	
NO.	DESCRIPTION
3	13.50"
5	15.50"
7	17"
9	19"

LEG ASSY	
NO.	DESCRIPTION
0	Sets
1	Left Hand
2	Right Hand

RETRACT TUBE	
NO.	DESCRIPTION
0	Standard
5	R.C.F MRL
6	Shock Can
9	Special
B	Min. Retracted Shockfoot & Low Profile RCF

GREASE	
NO.	DESCRIPTION
0	Standard Pack
3	Full Pack - GB & HD
9	Special
Q	NoLube (Permanently Lubricated)
S	10 Year Warranty Per Block "Q" & LG0128 - Shockfoot or RCF Req'd.
F	45° Fittings
G	4 Straight Fittings Per Leg

LOG NO.	ACCESSORY NO.
Contact SAF-HOLLAND Customer Service for Special Options & Accessories	

 Amendments and errors reserved. © SAF-HOLLAND, Inc.

SAF-HOLLAND Group

*Models Mfg. prior to January 2013, see page 1-17.

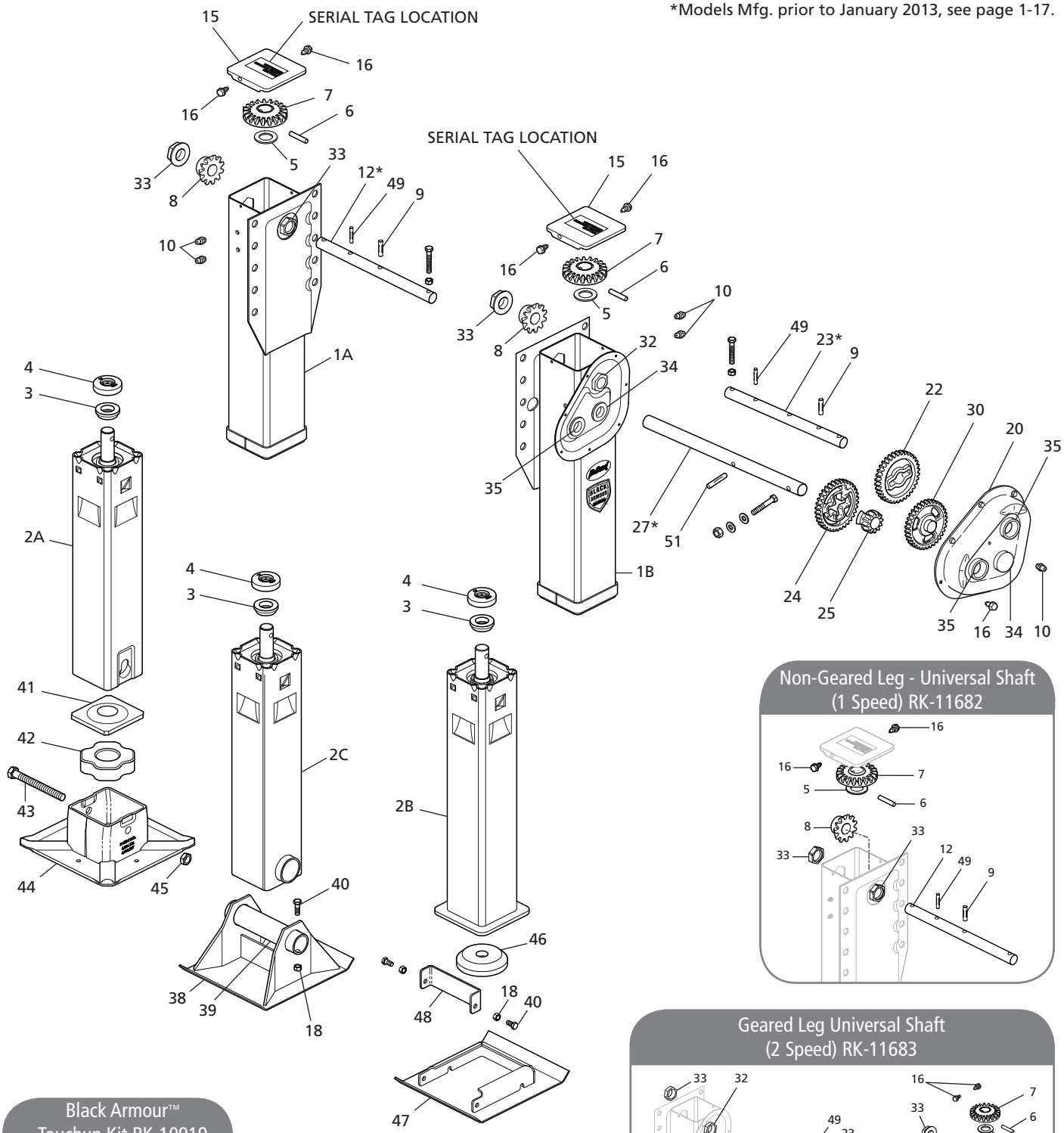

Non-Geared Leg - Universal Shaft (1 Speed) RK-11682

Geared Leg Universal Shaft (2 Speed) RK-11683

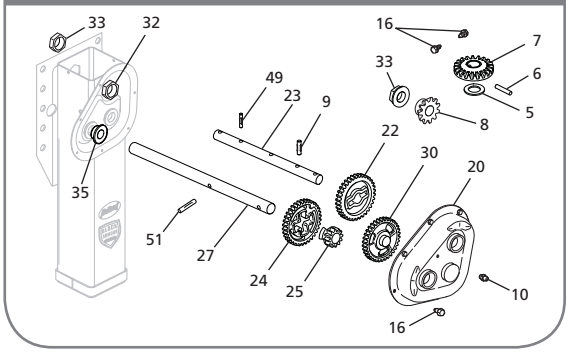

Black Armour™ Touchup Kit RK-10919

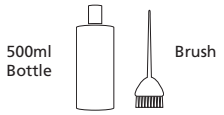

XL-LG11389PM-en-US Rev F 08-2014 Amendments and errors reserved. © SAF-HOLLAND, Inc.

NO.	DESCRIPTION	TRAVEL				
		13.50″	15.50″	17″	17″*MRL.	19″
2A	Retract Tube - RCF	2111200000130	2111200000140	2111200000150	2111200000160	2111200000170
2B	Retract Tube - Low Profile RCF	2111200002480	2111200002490	2111200002510	2111200002500	2111200002520
2C	Retract Tube - Axle	2111200000230	2111200000240	2111200000250	N/A	2111200000260

NO.	DESCRIPTION	PART NO.	SPEED	
			ONE	TWO
1A	Upper Housing LH	N/A	-	-
1B	Upper Housing RH	N/A	-	-
3	Collar	XB-LG0544	1	1
4	Thrust Bearing	XB-BRG-013-77	1	1
5	Washer - FL 2″OD x 1.19″ ID x .13″ THK	XB-PW-016-62	1	1
6	Pin - DIA .38″x 2"	XA-CRP-V-06635	1	2
7	Bevel Gear	LG2884	1	1
8	Pinion Gear	LG1823-02	1	1
9	Groove Pin - DIA .38″ x 1.50″	XB-GP-014-18	1	1
10	Ftg - Grease .25″-28 Self Tapping	XB-GRF-022-16	2	3
12	Jack Shaft LH - Universal Mount	2111100000431	1	-
	- I-Beam Mount - 6.5″	2111100000461	1	-
	- I-Beam Mount - 10″	2111100000471	1	-
	- Conventional Mount	2111100000441	1	-
	- Reverse Mount	2111100000451	1	-
15	Top Cover	2111100000530	1	1
16	Self-Tapping Screw .25″-20 x .5″ Lg	XB-STS-008-11	2	9
17	Screw, Hex Cap .38″-16 x 2.25″Lg GR5	XB-HHC-050-42	1	2
18	Self-Locking Nut .38″-16 - Sandshoe	XB-SLN-012-04	2	3
	- Low Profile RCF	XB-SLN-012-04	3	4
19	Washer .38″ Std Type A	XB-PW-016-03	-	2
20	Gearbox Half, Outside w/Hole for Grease Fitting	LG2996	-	1
	Includes: (1) Idler Shaft Bushing - #34	-	-	-
	(2) Boss Bearing - Sealed - #35	-	-	-
22	Output Gear	LG2980	-	1
23	Jackshaft RH - Universal Mount	2111100000481	-	1
	- I-Beam Mount - 6.5″ Shaft	2111100000511	-	1
	- I-Beam Mount - 10.0″ Shaft	2111100000521	-	1
	- Conventional Mount	2111100000491	-	1
	- Reverse Mount	2111100000501	-	1
24	Gear Drive, High Speed - Machined	2040100000060	-	1
25	Gear Drive, Low Speed - Machined	2040100000050	-	1
26	Groove Pin, Type E DIA . - .375 x 2″Type E	XB-GP-052-21	-	1
27	Shift Shaft - Universal	2111100003400	-	1
	- I-Beam & Conventional	2111100003410	-	1
	- Reverse	2111100003420	-	1

NO.	DESCRIPTION	PART NO.	SPEED	
			ONE	TWO
30	Idler Gear	LG2975	-	1
32	Hex Lock Boss	2022100000190	-	1
33	Hex Lock Boss - Sealed	2022300000020	2	1
34	Idler Shaft Bushing (Included in Item #20)	LG3005	-	2
35	Boss Bearing - Sealed (Included in Item #20)	LG0659-10	-	3
38	Sandshoe - 10" x 10" x 2.00"	LG0056	1	1
	- 10" x 12" x 2.00"	LG0051	1	1
	- 12" x 12" x 2.00"	LG0122	1	1
	- 10" x 10" x 2.00" HD	LG0056-02	1	1
	- 10" x 10" x 4.50"	LG0055	1	1
	- 10" x 12" x 4.50"	LG0050	1	1
	- 12" x 12" x 4.50"	LG0065-04	1	1
	- 16" x 16" x 4.50"	LG1815-05	1	1
	- 10" x 10" x 4.50" HD	LG0055-01	1	1
	- 10" x 12" x 4.50" HD	LG0065	1	1
	- 12" x 12" x 4.50" HD	LG0065-01	1	1
	- 12" x 17" x 4.50" HD	LG0065-02	1	1
39	Sandshoe Axle - Hollow Axle 8.50" Lg	LG0070-02	1	1
40	Screw, Hex Cap .38"-16 x .75" Lg GR5 - Sandshoe	XB-HHC-050-69	1	1
	Screw, Hex Cap .38"-16 x .75" Lg GR5 - Low Profile RCF	XB-HHC-050-69	2	2
41	Cushion Foot Plate	2034160000150	1	1
42	Cushion Foot Rubber	XB-LG0713	1	1
43	Bolt - Hex Head .63″ -11 x 6.00″	XB-HHB-050-58	1	1
44	R.C.F. - 10″ x 10″	2034200000170	1	1
45	Self-Locking Nut - .63″-11″	XB-SP0012-10	1	1
46	Cushion Foot Pad - Low Profile R.C.F.	728003	1	1
47	Low Profile R.C.F.	730640	1	1
48	Interchangeable Strap	730638	1	1
49	Pin, Spring, .25″ DIA. x 1.50″	XB-SP-014-27	1	1
51	Groove Pin, Type E, .31″ DIA. x 2.00″ LG	XB-GP-052-52	-	1

For technical assistance please go to www.safholland.us or call 800.876.3929

 Amendments and errors reserved. © SAF-HOLLAND, Inc.

SAF-HOLLAND Group

*Models Mfg. prior to January 2013, see page 1-17.

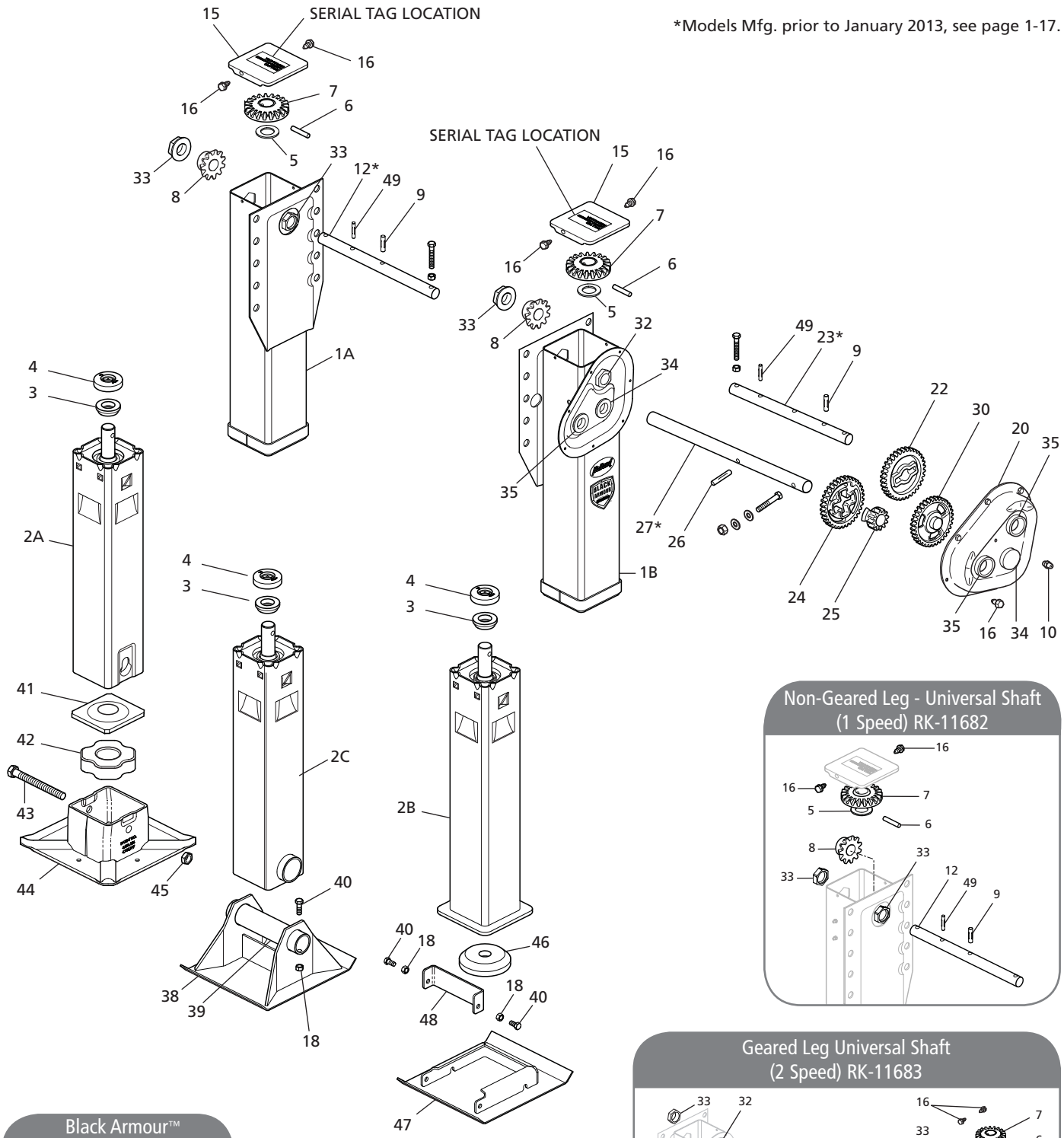

Non-Geared Leg - Universal Shaft (1 Speed) RK-11682

Geared Leg Universal Shaft (2 Speed) RK-11683

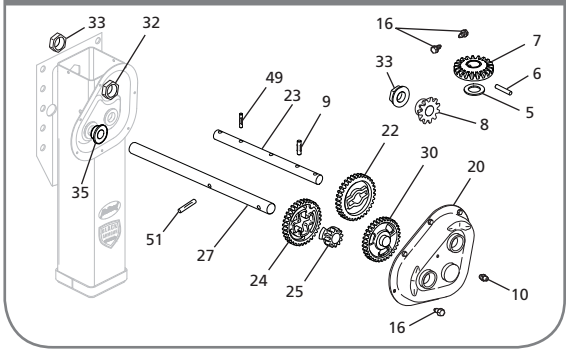

Black Armour™ Touchup Kit RK-10919

XL-LG11389PM-en-US Rev F 08-2014 Amendments and errors reserved. © SAF-HOLLAND, Inc.

NO.	DESCRIPTION	TRAVEL				
		13.50″	15.50″	17″	17″*MRL.	19″
2A	Retract Tube - RCF	2111200000870	2111200000880	2111200000890	2111200000900	2111200000910
2B	Retract Tube - Low Profile RCF	2111200002530	2111200002540	2111200002560	2111200002550	2111200002570
2C	Retract Tube - Axle	2111200000970	2111200000980	2111200000990	N/A	2111200001000

NO.	DESCRIPTION	PART NO.	SPEED	
			ONE	TWO
1A	Upper Housing LH	N/A	-	-
1B	Upper Housing RH	N/A	-	-
3	Collar	XB-LG0544	1	1
4	Thrust Bearing	XB-BRG-013-77	1	1
5	Washer - FL 2″OD x 1.19″ ID x .13″ THK	XB-PW-016-62	1	1
6	Pin - DIA .38″x 2"	XA-CRP-V-06635	1	2
7	Bevel Gear	LG2884	1	1
8	Pinion Gear	LG1823-02	1	1
9	Groove Pin - DIA .38″ x 1.50″	XB-GP-014-18	1	1
12	Jack Shaft LH - Universal Mount	2111100000431	1	-
	- I-Beam Mount - 6.5″	2111100000461	1	-
	- I-Beam Mount - 10″	2111100000471	1	-
	- Conventional Mount	2111100000441	1	-
	- Reverse Mount	2111100000451	1	-
15	Top Cover	2111100000530	1	1
16	Self-Tapping Screw .25″-20 x .5″ Lg	XB-STS-008-11	2	9
17	Screw, Hex Cap .38″-16 x 2.25″Lg GR5	XB-HHC-050-42	1	2
18	Self-Locking Nut .38″-16 - Sandshoe	XB-SLN-012-04	2	3
	- Low Profile RCF	XB-SLN-012-04	3	4
19	Washer .38″ Std Type A	XB-PW-016-03	-	2
20	Gearbox Half, Outside w/Hole for Grease Fitting	LG2996	-	1
	Includes: (1) Idler Shaft Bushing - #34	-	-	-
	(2) Boss Bearing - Sealed - #35	-	-	-
22	Output Gear	LG2980	-	1
23	Jackshaft RH - Universal Mount	2111100000480	-	1
	- I-Beam Mount - 6.5″ Shaft	2111100000510	-	1
	- I-Beam Mount - 10.0″ Shaft	2111100000520	-	1
	- Conventional Mount	2111100000490	-	1
	- Reverse Mount	2111100000500	-	1
24	Gear, Drive, High Speed - Machined	2040100000060	-	1
25	Gear, Drive, Low Speed - Machined	2040100000050	-	1
26	Groove Pin, Type E DIA .38″ x 2.00″ Lg	XB-GP-052-21	-	1
27	Shift Shaft - Universal	2111100003400	-	1
	- I-Beam & Conventional	2111100003410	-	1
	- Reverse	2111100003420	-	1

NO.	DESCRIPTION	PART NO.	SPEED	
			ONE	TWO
30	Idler Gear	LG2975	-	1
32	Hex Lock Boss	2022100000190	-	1
33	Hex Lock Boss - Sealed	2022300000020	2	1
34	Idler Shaft Bushing (Included in Item #20)	LG3005	-	2
35	Boss Bearing - Sealed (Included in Item #20)	LG0659-10	-	3
38	Sandshoe - 10" x 10" x 2.00"	LG0056	1	1
	- 10" x 12" x 2.00"	LG0051	1	1
	- 12" x 12" x 2.00"	LG0122	1	1
	- 10" x 10" x 2.00" HD	LG0056-02	1	1
	- 10" x 10" x 4.50"	LG0055	1	1
	- 10" x 12" x 4.50"	LG0050	1	1
	- 12" x 12" x 4.50"	LG0065-04	1	1
	- 16" x 16" x 4.50"	LG1815-05	1	1
	- 10" x 10" x 4.50" HD	LG0055-01	1	1
	- 10" x 12" x 4.50" HD	LG0065	1	1
	- 12" x 12" x 4.50" HD	LG0065-01	1	1
	- 12" x 17" x 4.50" HD	LG0065-02	1	1
39	Sandshoe Axle - Hollow Axle 8.50" Lg	LG0070-02	1	1
40	Screw, Hex Cap .38"-16 x .75" Lg GR5 - Sandshoe	XB-HHC-050-69	1	1
	Screw, Hex Cap .38"-16 x .75" Lg GR5 - Low Profile RCF	XB-HHC-050-69	2	2
41	Cushion Foot Plate	2034160000150	1	1
42	Cushion Foot Rubber	XB-LG0713	1	1
43	Bolt - Hex Head .63″ -11 x 6.00″	XB-HHB-050-58	1	1
44	R.C.F. - 10″ x 10″	2034200000170	1	1
45	Self-Locking Nut - .63″-11″	XB-SP0012-10	1	1
46	Cushion Foot Pad - Low Profile R.C.F.	728003	1	1
47	Low Profile R.C.F.	730640	1	1
48	Interchangeable Strap	730638	1	1
49	Pin, Spring, .25″ DIA. x 1.50″	XB-SP-014-27	1	1
50	Groove Pin, Type E, .31″ DIA. x 2.00″ LG	XB-GP-052-52	-	1

For technical assistance please go to www.safholland.us or call 800.876.3929

 Amendments and errors reserved. © SAF-HOLLAND, Inc.

Jack Shaft Conventional - LH
RK-11822-C

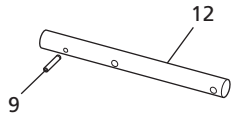

Jack Shaft Conventional - RH
RK-11823-C

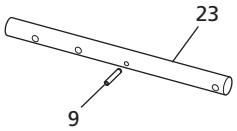

Conventional Shift Shaft
RK-11824-C

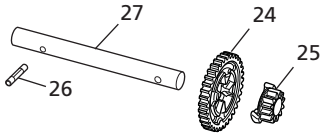

Jack Shaft I-Beam Mount 6.5″ - LH
RK-11822-IL

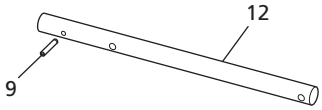

Jack Shaft I-Beam Mount 6.5″ - RH
RK-11822-IL

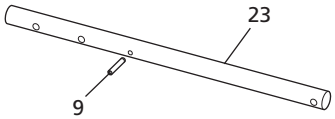

Jack Shaft I-Beam Mount 10.0″ - LH
RK-11822-IS

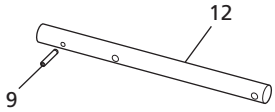

Jack Shaft I-Beam Mount 10.0″ - RH
RK-11823-IS

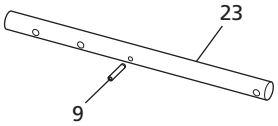

Jack Shaft - Reverse - LH
RK-11822-R

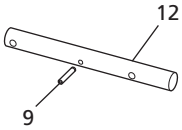

Jack Shaft - Reverse - RH
RK-11823-R

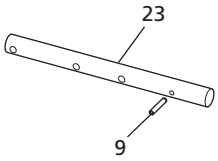

Reverse Shift Shaft
RK-11824-R

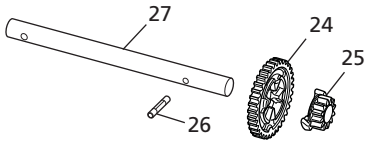

Jack Shaft Universal - LH
RK-11822-U

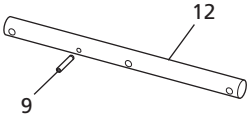

Jack Shaft Universal - RH
RK-11823-U

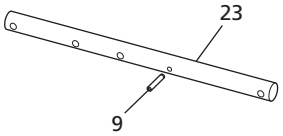

Universal Shift Shaft
RK-11824-U

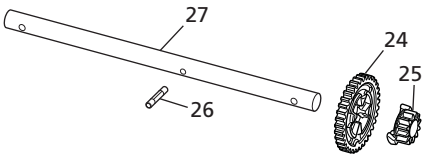

XL-LG11389PM-en-US Rev F 08-2014 Amendments and errors reserved. © SAF-HOLLAND, Inc.

For Models Prior to January 2013

* All Parts Sold Individually

Jack Shaft - LH

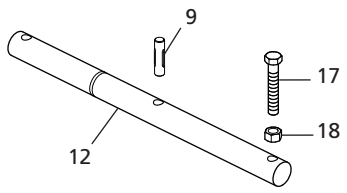

Jack Shaft - RH

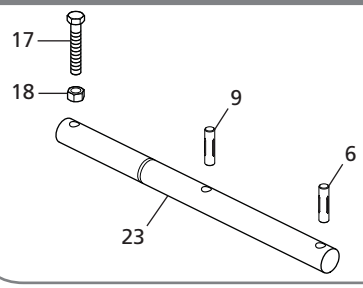

Shift Shaft

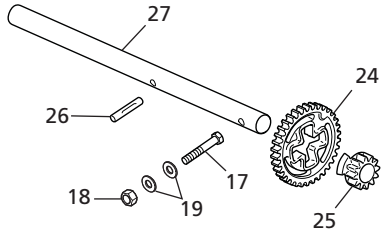

NO.	DESCRIPTION	PART NO.	SPEED	
			ONE	TWO
6	"Pin- DIA .38" x 2"	XA-CRP-V-06635	1	2
9	"Groove Pin- DIA .38" x1.50"	XB-GP-014-18	1	1
12	Jack Shaft - Universal Mount	2111100000430	1	-
	- Beam Mount- 6.5"	2111100000460	1	-
	- I-Beam Mount- 10.0"	2111100000470	1	-
	- Conventional Mount	2111100000440	1	-
	- Reverse Mount	2111100000450	1	-
17	"Screw, Hex Cap .38" -16 x 2.25" "Lg GR5"	XB-HHC-050-42	1	2
18	"Self Locking Nut .38" -16 - Sandshoe	XB-SLN-012-04	2	3
	- Low Profile RCF	XB-SLN-012-04	3	4
19	"Washer .38"" Std Type A"	XB-PW-016-03	-	2
23	Jack Shaft - Universal Mount	2111100000480	-	1
	- Beam Mount- 6.5"	211110000510	-	1
	- I-Beam Mount- 10.0"	2111100000520	-	1
	- Conventional Mount	2111100000490	-	1
	- Reverse Mount	2111100000500	-	1
24	Gear Drive, High Speed - Machined	2040100000060	-	1
25	Gear Drive, Low Speed - Machined	2040100000050	-	1
	"Pin,Groove .375x2" " Type E"	XB-GP-052-21	-	1

 Amendments and errors reserved. © SAF-HOLLAND, Inc.

SAF-HOLLAND Group

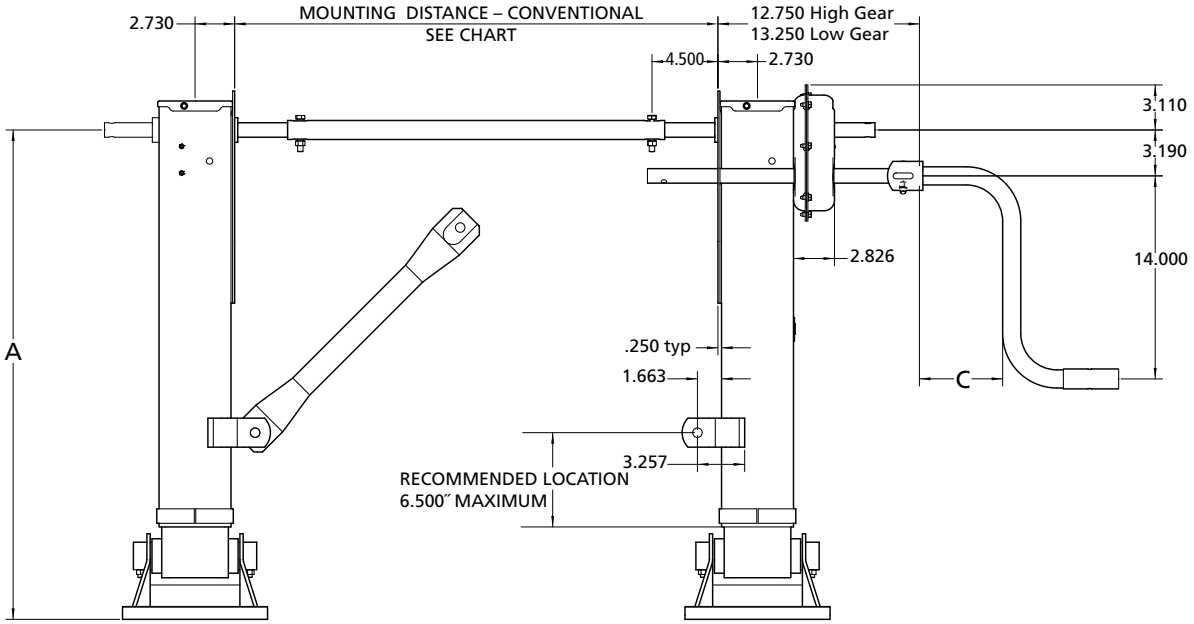

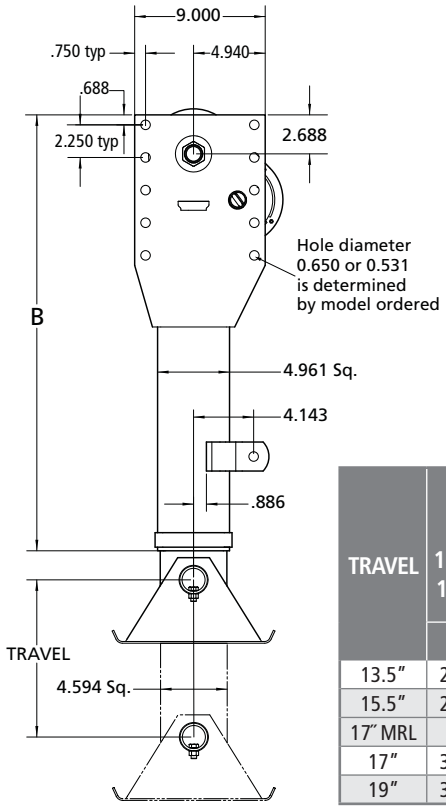

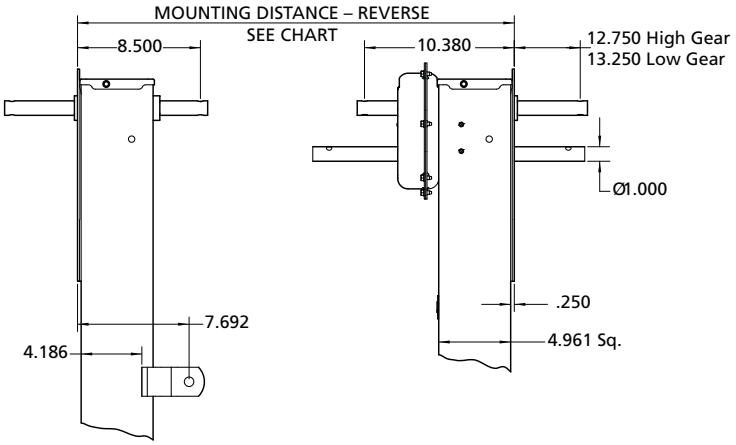

ATLAS 65 DIMENSIONS

TRAVEL	4.50″ TALL SANDSHOE 10x10, 10x12, 12x12, 16x16		4.50″ TALL HD SANDSHOE 10x10, 10x12, 12x12, 12x17		2.00″ TALL SANDSHOE 10x10, 10x12, 12x12,		2.00″ TALL HD SANDSHOE 10x10		R.C.F. STANDARD		R.C.F. LOW PROFILE		CRANK PART NO.	"C"
	"A"	"B"	"A"	"B"	"A"	"B"	"A"	"B"	"A"	"B"	"A"	"B"		
13.5″	28.85	25.56	28.85	25.56	26.35	25.56	26.35	25.56	27.41	25.56	27.40	25.56	LG0083-01	6.38
15.5″	29.85	26.56	29.85	26.56	27.35	26.56	27.35	26.56	28.41	26.56	28.40	26.56	LG0083-03	12.00
17″ MRL	N/A	N/A	N/A	N/A	N/A	N/A	N/A	N/A	29.91	28.06	28.90	28.06		
17″	31.35	28.06	31.35	28.06	28.85	28.06	28.85	28.06	31.91	30.06	31.90	30.06	LG0083-05	18.00
19″	33.85	30.06	33.85	30.06	31.35	30.06	31.35	30.06	32.54	30.06	32.50	30.06		

MOUNTING DISTANCES

REVERSE MOUNTING DISTANCE	96″ WIDE TRAILER	102″ WIDE TRAILER
Maximum	84.00	90.00
Minimum - LG0083-01	78.00	84.00
Minimum - LG0083-03	66.75	72.75
Minimum - LG0083-05	54.75	60.75

CONVENTIONAL MOUNTING DISTANCE	96″ WIDE TRAILER	102″ WIDE TRAILER
Maximum	67.50	73.50
Minimum - LG0083-01	61.50	67.50
Minimum - LG0083-03	50.25	56.25
Minimum - LG0083-05	38.25	44.25

XL-LG11389PM-en-US Rev F 08-2014 Amendments and errors reserved. © SAF-HOLLAND, Inc.

Type Code Description

LG6 0 0 0 00 0 0

SHAFTS

0	Standard Universal
1	Standard Inside
2	Outside I-Beam 6.5″
3	Outside I-Beam 10″
4	Standard Outside

LUBE/WARRANTY

0	Std. Lube Std. Warranty
1	No Lube Std. Warranty
2	No Lube 10 Yr. Warranty

FOOTWARE

99	No Foot
98	Leg with Axle - No Foot
97	Sand Shoe 4.5″ x 10″ x 10″
96	Sand Shoe 4.5″ x 10″ x 12″
95	Sand Shoe 2″ x 10″ x 10″
94	Sand Shoe 2″ x 10″ x 12″
93	Sand Shoe HD 4.5″ x 12″ x 12″
92	Standard Foot RCF 10″ x 10″
91	Low Profile RCF
90	For RCF - No Foot
89	Low Profile RCF - No Foot
88	Sand Shoe 4.5″ x 16″ 16″
87	Sand Shoe LP 2″ x 12″ x 12″
86	Sand Shoe STD 4.5″ x 12″ x 12″
85	Sand Shoe HD 4.5″ x 12″ x 17″
84	Sand Shoe HD 4.5″ x 12″ x 10″
83	Sand Shoe HD-LP 2″ x 10″ x 10″
82	Sand Shoe HD 4.5″ x 10″ x 10″
81	Sand Foot RCF 12″ x 12″
80	Sand Shoe 4.5″ x 18″ x 16″
79	Sand Shoe LP 2″ x 16″ x 16″

MOUNTING PLATE

0	Standard Taper .656″ Ø
1	Standard Taper .531″ Ø

TRAVEL

3	13.50″
5	15.50″
6	17″ - MRL
7	17″
9	19″

LEG ASSEMBLY

0	Sets
1	Left Hand
2	Right Hand

MODEL

LG6	ATLAS 65

Serial Tag

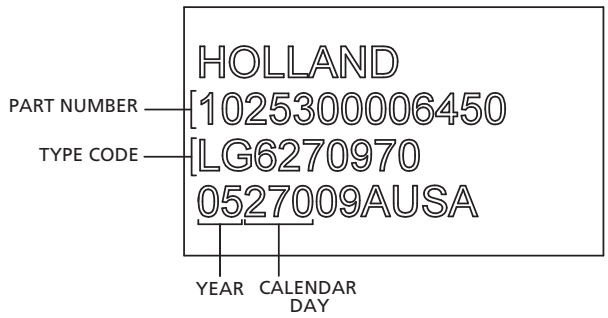

NOTE:
For additional information on your landing gear, contact SAF-HOLLAND Customer Serivce with your part number.

SAF-HOLLAND Group

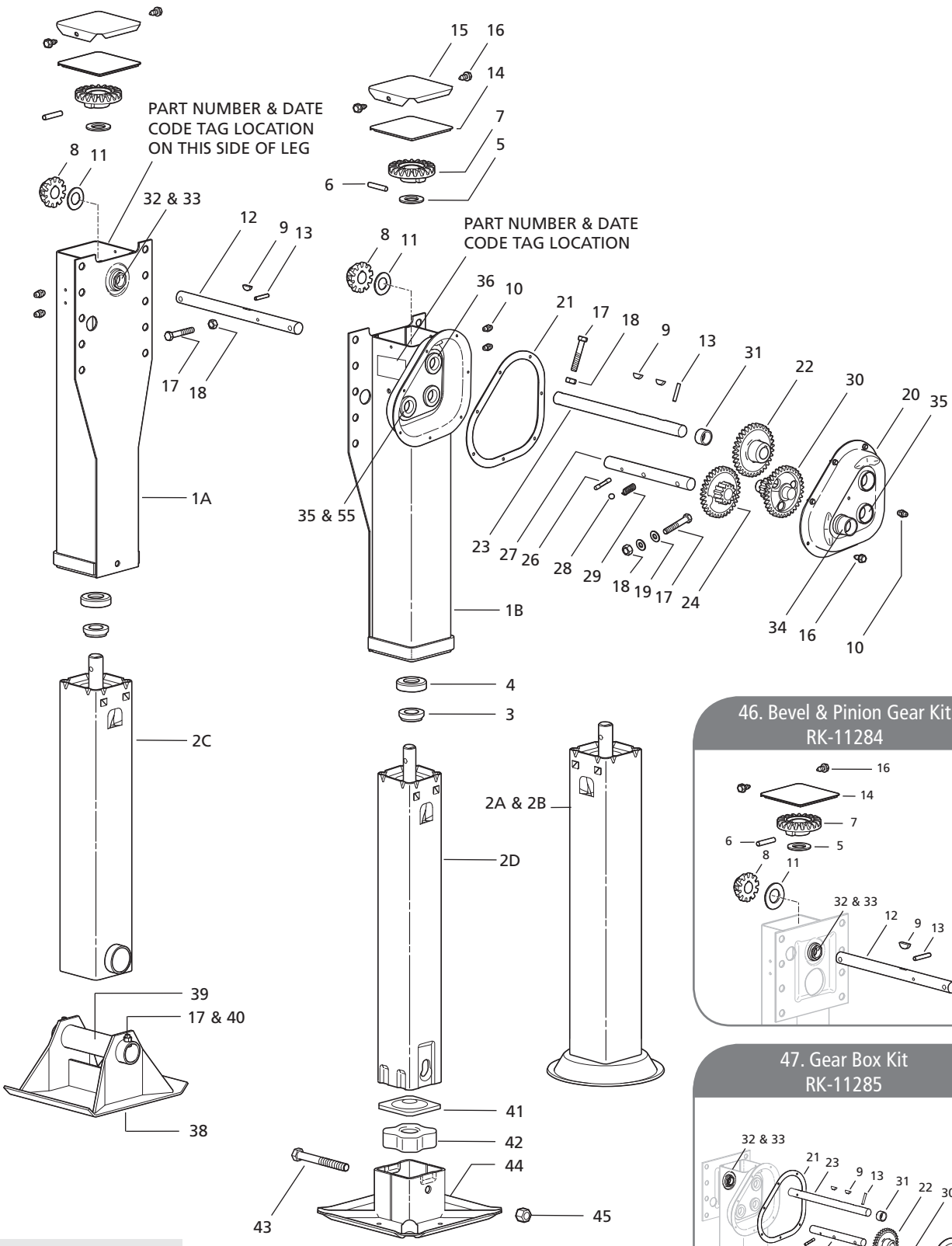

46. Bevel & Pinion Gear Kit RK-11284

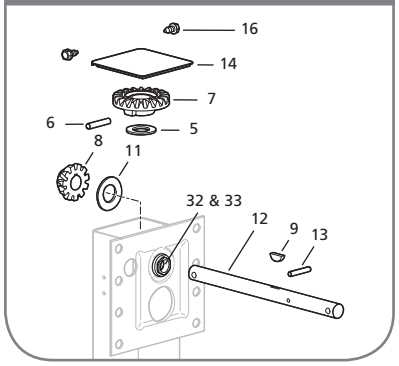

47. Gear Box Kit RK-11285

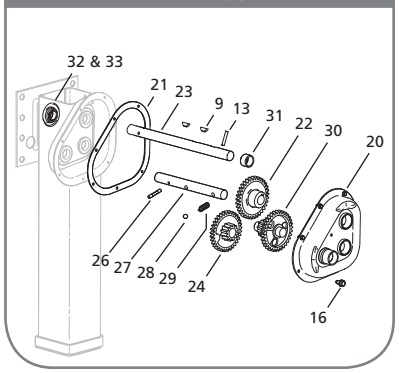

DISCONTINUED MODEL SERVICE PARTS ONLY

As of 03/2012 50000 model legs were replaced with the ATLAS 65 model.

XL-LG11389PM-en-US Rev F 08-2014 Amendments and errors reserved. © SAF-HOLLAND, Inc.

NO.	DESCRIPTION	RETRACT TUBE CODE	TRAVEL				
			13.50"	15.50"	17"	17" *CAN	19"
2A	Retract Tube Ass'y - DIA 10" Shock Foot	0 or *6	LG0569-02	N/A	LG0569	LG0569-01	LG0569-04
2B	Retract Tube Ass'y - DIA 12" Shock Foot	0 or *6	LG0580-01	N/A	LG0580-02	LG0580-05	LG0580-03
2C	Retract Tube Ass'y - Axle Socket	0	LG0574-01	LG0574-05	LG0574-02	N/A	LG0574-04
2D	Retract Tube Ass'y - RCF	0 or 5	N/A	N/A	LG0747-504	N/A	LG0747-505

NO.	DESCRIPTION	PART NO.	SPEED	
			ONE	TWO
1A	Upper Housing LH	N/A	-	-
1B	Upper Housing RH	N/A	-	-
3	Collar	XB-LG0544	1	1
4	Thrust Bearing	XB-BRG-013-77	1	1
5	Washer - FL 2"OD x 1.19" ID x .13"THK	XB-PW-016-62	1	1
6	Pin - DIA .38"x 2"	XB-CRP-V-06635	1	1
7	Bevel Gear	XA-LG0570-01	1	1
8	Pinion Gear	LG0531-02	1	1
9	Key - Woodruff .25" x .88"	XB-KEY-018-02	1	2
10	Ftg - Grease .25"-28 Self Tapping	XB-GRF-022-16	2	3
11	Washer - Fl 1.88"OD x 1.02"ID x .06" THK	XB-PW-016-19	1	1
12	Jack Shaft LH - Universal Mount	LG0259	1	-
	- I-Beam Mount	LG0369-01	1	-
	- Conventional Mount	LG0369-05	1	-
	- Reverse Mount	LG0436	1	-
13	Pin - Spring DIA .25" x 1.5"	XB-SP-014-27	1	1
14	Gasket	XB-LG0413	1	1
15	Cover	LG0264	1	1
16	Self-Tapping Screw - .25"-20 x .5" Lg	XB-STS-008-11	2	9
17	Screw - Hex Hd .38"-16 x 2.25" Gr5	XB-HHC-050-42	1	2
18	Self-Locking Nut - .38"-16	XB-SLN-012-04	2	3
19	Washer - .38" Std. Type A	XB-PW-016-03	-	2
20	Gearbox Half, Outside w/Hole for Grease Fitting	XB-LG0663	-	1
20	Gearbox Half, Outside w/Grease Fitting Included	LG0663	-	1
21	Gearbox Gasket	XB-LG0428	-	1
22	Output Gear	LG0543-01	-	1
23	Jackshaft RH - Universal Mount	LG0260	-	1
	- I-Beam Standard Mount	LG0370-01	-	1
	- Conventional Mount	LG0370-05	-	1
	- Reverse Mount	LG0438	-	1
24	Input Gear - High & Low	LG0541-01	-	1
26	Groove Pin - .25"x 1.50" Lg Type E	XB-GP-014-07	-	1
27	Shift Shaft - Universal Mount	LG0261-01	-	1
	- I-Beam & Conventional Mount	LG0371-01	-	1
	- Reverse Mount	LG0437	-	1
28	Shift Lock Ball	XB-BAL-023-07	-	1
29	Shift Lock Spring	XB-SPG-020-36	-	1
30	Idler Gear	XB-LG0542-01	-	1
31	Spacer Bushing	XB-LG0219-01	-	1
32	Retainer - Hex Lock	LG2094	2	1
33	Hex Lock Boss	LG2095	2	1
34	Shift Lock Boss	XB-LG0658-01	-	1
35	Gearbox Boss	XB-LG0659-01	-	4
36	Gearbox Boss - Inside Half	XB-LG0660	-	1

NO.	DESCRIPTION	PART NO.	SPEED	
			ONE	TWO
38	Sandshoe - 10" x 10" x 4.50"	50616001	1	1
	- 10" x 12" x 4.50"	50616000	1	1
	- 10" x 10" x 2.00"	50616008	1	1
	- 10" x 12" x 2.00"	50616007	1	1
39	Sandshoe Axle - Hollow Axle 8.50" Lg	LG0070-02	1	1
40	Screw - Hex Cap .38"-16 x .25" Gr5	XB-HHC-050-69	1	1
41	Cushion Foot Plate	LG0725	1	1
42	Cushion Foot Rubber	XB-LG0726	1	1
43	Bolt - Hex Head .63" -11 x 5.50"	XB-HHB-050-70	1	1
44	R.C.F. - 10" x 10"	LG0732-01	1	1
45	Self-Locking Nut - .63"-11	XB-SP0012-10	1	1
46	Bevel & Pinion Gear Repair Kit	RK-11284	1	1
47	Gear Box Repair Kit	RK-11285	-	1
48	Black Armour™ Touchup Kit (not shown)	RK-10919	1	1

For technical assistance please go to www.safholland.us or call 800.876.3929

 Amendments and errors reserved. © SAF-HOLLAND, Inc.

SAF-HOLLAND Group

NoLube™

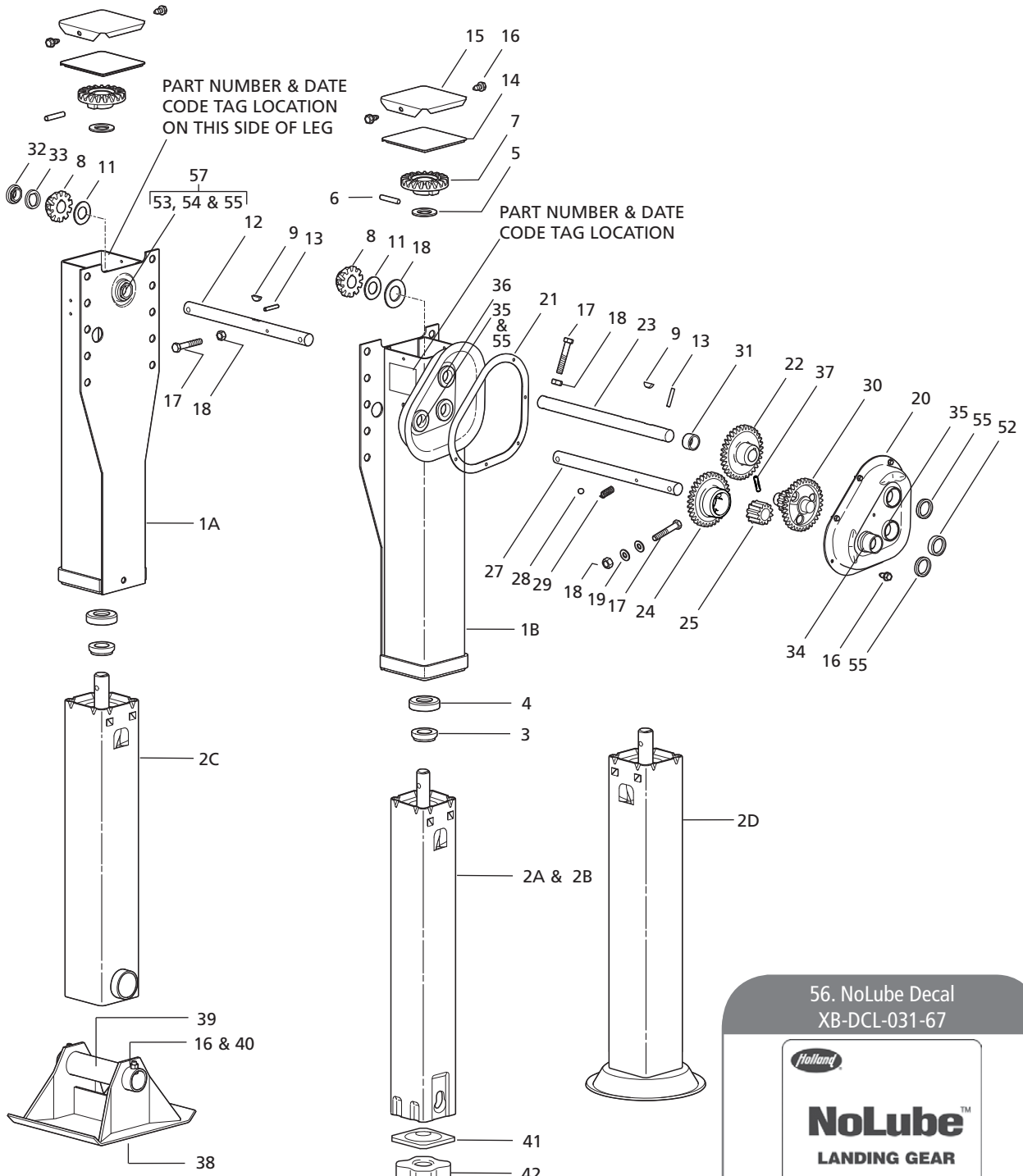

56. NoLube Decal
XB-DCL-031-67

DISCONTINUED MODEL SERVICE PARTS ONLY
As of 03/2012 50000 model legs were replaced with the ATLAS 65 model.

XL-LG11389PM-en-US Rev F 08-2014 Amendments and errors reserved. © SAF-HOLLAND, Inc.

NO.	DESCRIPTION	RETRACT TUBE CODE	TRAVEL				
			13.50″	15.50″	17″	17″ *CAN	19″
2A	Retract Tube Ass'y - DIA 10″ Shock Foot	0 OR *6	N/A	N/A	LG0569-20	LG0569-21	LG0569-22
2B	Retract Tube Ass'y - DIA 12″ Shock Foot	0 OR *6	N/A	N/A	LG0580-22	LG0580-23	LG0580-24
2C	Retract Tube Ass'y - Axle Socket	0	LG0574-21	LG0574-25	LG0574-22	N/A	LG0574-24
2D	Retract Tube Ass'y - RCF	0 OR 5	N/A	N/A	LG2744-21	N/A	LG2744-22

NO.	DESCRIPTION	PART NO.	SPEED	
			ONE	TWO
1A	Upper Housing LH	N/A	-	-
1B	Upper Housing RH	N/A	-	-
3	Collar	XB-LG0544	1	1
4	Thrust Bearing	XB-BRG-013-77	1	1
5	Washer - FL 2″OD x 1.19″ ID x .13″THK	XB-PW-016-62	1	1
6	Groove Pin - DIA .38"x 2"	XB-CRP-V-06635	1	1
7	Bevel Gear	XA-LG0570-01	1	1
8	Pinion Gear	LG0531-02	1	1
9	Key - Woodruff .25″ x .88″	XB-KEY-018-02	1	2
11	Washer - Fl 1.88″OD x 1.02″ID x .06″ THK	XB-PW-016-19	1	1
12	Jack Shaft LH - Universal Mount	LG0259	1	-
	- I-Beam Mount	LG0369-01	1	-
	- Conventional Mount	LG0369-05	1	-
	- Reverse Mount	LG0436	1	-
13	Pin - Spring DIA .25″ x 1.50″	XB-SP-014-27	1	1
14	Gasket	XB-LG0413	1	1
15	Cover	LG0264	1	1
16	Self-Tapping Screw - .25″-20 x .50″ Lg.	XB-STS-008-11	2	9
17	Screw - Hex Hd .38″-16 x 2.25″ Lg. Gr5	XB-HHC-050-42	1	2
18	Self-Locking Nut - .38″-16	XB-SLN-012-04	2	3
19	Washer - .38″ Std. Type A	XB-PW-016-03	-	2
20	Gearbox Half Assy - Outside - Sealed	LG0663-11	-	1
21	Gearbox Gasket	XB-LG0428	-	1
22	Output Gear	LG0543-01	-	1
23	Jackshaft RH - Universal Mount	LG0260	-	1
	- I-Beam Mount	LG0370-01	-	1
	- Conventional Mount	LG0370-05	-	1
	- Reverse Mount	LG0438	-	1
24	Input Gear - High	XD-LG0856	-	1
25	Input Gear - Low	XB-LG0857-01	-	1
27	Shift Shaft - Universal EZ Shift	LG0861-01	-	1
	- I-Beam & Conventional EZ Shift	LG0859-01	-	1
	- Reverse EZ Shift	LG0858	-	1
28	Shift Lock Ball	XB-BAL-023-07	-	1
29	Shift Lock Spring	XB-SPG-020-36	-	1
30	Idler Gear	XB-LG0542-01	-	1
31	Spacer Bushing	XB-LG0219-01	-	1
32	Retainer - Hex Lock	XB-LG1570	1	-
33	Hex Lock Boss w/Seals	LG0559-10	1	-
34	Shift Lock Boss	XB-LG0658-01	-	1
35	Gearbox Boss	XB-LG0659-01	-	4
36	Gearbox Boss - Inside Half	XB-LG0660	-	1
37	Groove Pin - .25″ x 1.25″ Type E	XB-GP-052-22	-	1

NO.	DESCRIPTION	PART NO.	SPEED	
			ONE	TWO
38	Sandshoe - 10" x 10" x 4.50"	50616001	1	1
	- 10" x 12" x 4.50"	50616000	1	1
	- 10" x 10" x 2.00"	50616008	1	1
	- 10" x 12" x 2.00"	50616007	1	1
39	Sandshoe Axle - Hollow Axle 8.50" Lg	LG0070-02	1	1
40	Screw - Hex Cap .38″-16 x .75″ GR5	XB-HHC-050-69	1	1
41	Cushion Foot Plate	LG0725	1	1
42	Cushion Foot Rubber	XB-LG0726	1	1
43	Bolt - Hex Head .63″ -11 x 5.50″	XB-HHB-050-70	1	1
44	R.C.F. - 10″ x 10″	LG0732-01	1	1
45	Self-Locking Nut - .63″-11	XB-SP0012-10	1	1
52	Freeze Plug	XB-SEL-030-22	-	1
53	Bushing	XB-LG0219-02	1	1
54	Short Boss	LG1326	1	1
55	Oil Seal	XB-SEL-030-17	1	4
56	NoLube Decal	XB-DCL-031-67	-	1
57	Bearing Boss Assy w/Oil Seal	LG1367-10	1	1
58	Black Armour™ Touchup Kit (not shown)	RK-10919	1	1

For technical assistance please go to www.safholland.us or call 800.876.3929

 Amendments and errors reserved. © SAF-HOLLAND, Inc.

SAF-HOLLAND Group

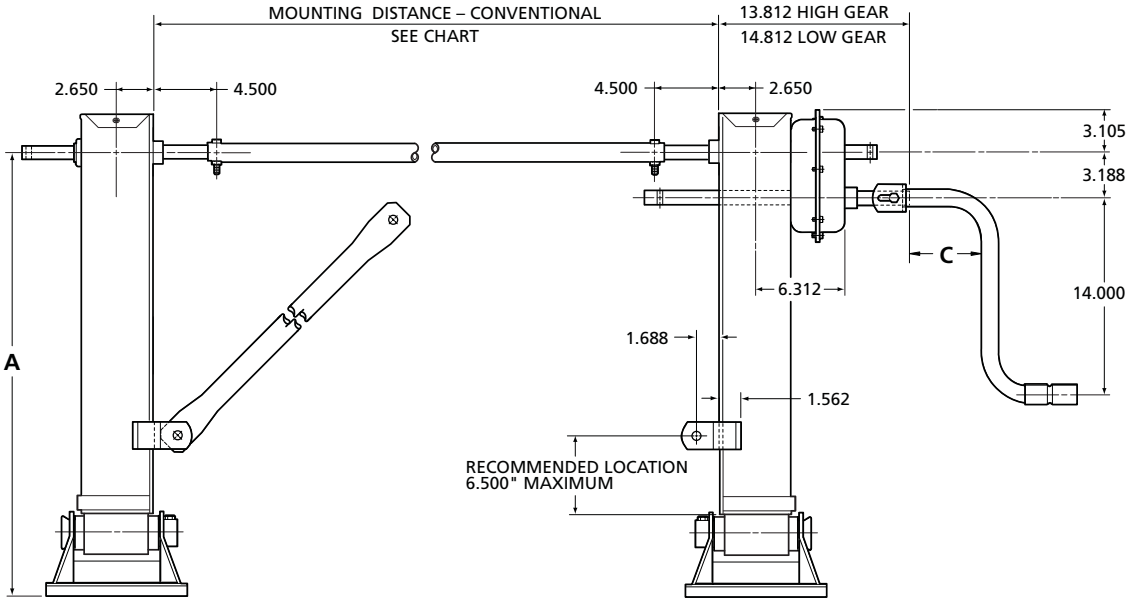

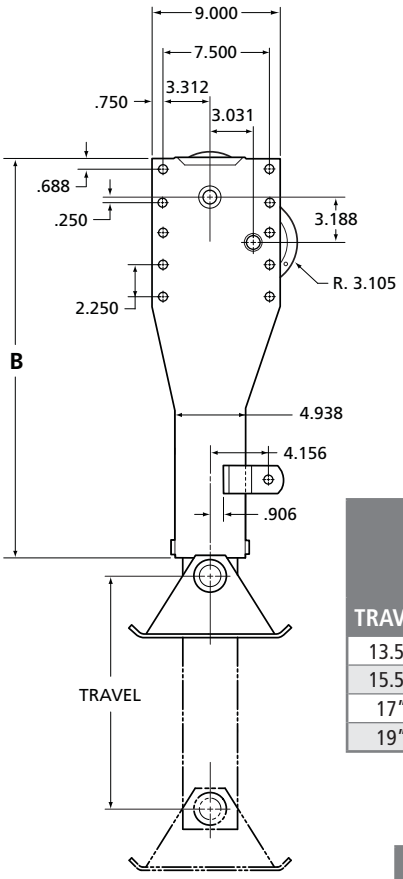

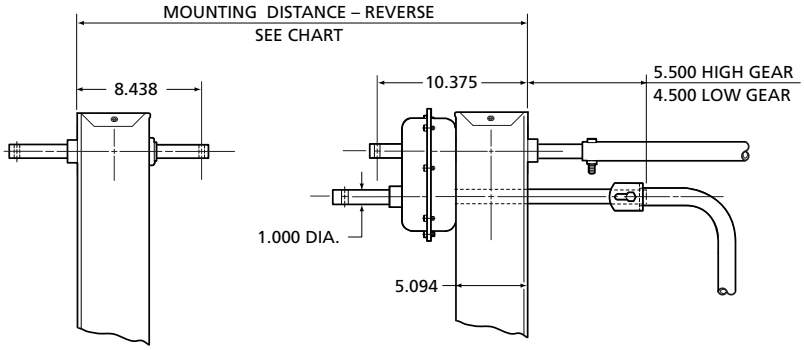

50000 DIMENSIONS

TRAVEL	10x10x4.50 & 10x12x4.50 Sandshoe		10x10x2 & 10x12x2 Sandshoe		SHOCKFOOT		SHOCKFOOT SHOCK CAN		R.C.F. - STD		R.C.F - MRL		CRANK PART NO.	"C"
	"A"	"B"	"A"	"B"	"A"	"B"	"A"	"B"	"A"	"B"	"A"	"B"		
13.5"	28.69	25.56	26.19	25.56	29.00	28.56	N/A	N/A	27.25	25.56	27.25	25.56	LG0083-01	5.25
15.5"	29.69	26.56	27.19	26.56	N/A	N/A	N/A	N/A	28.25	26.56	28.25	26.56	LG0083-03	10.88
17"	31.19	28.06	28.69	28.06	31.75	30.06	28.75	28.06	31.75	30.06	29.75	28.06		
19"	33.69	30.06	31.19	30.06	34.25	30.56	N/A	N/A	32.38	30.06	N/A	N/A	LG0083-05	16.88

MOUNTING DISTANCES

REVERSE MOUNTING DISTANCE	96" WIDE TRAILER	102" WIDE TRAILER
Maximum	85.000	91.000
Minimum - LG0083-01	79.000	85.000
Minimum - LG0083-03	67.750	73.750
Minimum - LG0083-05	55.750	61.750

CONVENTIONAL MOUNTING DISTANCE	96" WIDE TRAILER	102" WIDE TRAILER
Maximum	66.38	72.38
Minimum - LG0083-01	60.38	66.38
Minimum - LG0083-03	49.125	55.125
Minimum - LG0083-05	37.125	43.125

XL-LG11389PM-en-US Rev F 08-2014 Amendments and errors reserved. © SAF-HOLLAND, Inc.

LANDING GEAR	
NO.	MODEL
LG5	50000

MOUNTING	
NO.	DESCRIPTION
0	Univ. Mt. - .66"
1	Conv. Mt. - .66"
4	I-Beam Mt. - .66"
8	Reverse Mt. - .66"
9	Special
A	Univ. Mt. - .53"
B	Conv. Mt - .53"
H	I-Beam Mt. - .53"
L	Reverse Mt. - .53"

SHAFTS	
NO.	DESCRIPTION
0	Universal
1	Reverse
2	I-Beam
9	Conventional
A	I-Beam - 10"
J	Universal EZ-Shift
K	Conventional EZ-Shift
L	Reverse EZ-Shift
M	I-Beam EZ-Shift

FOOTWARE	
NO.	DESCRIPTION
0	No Footware
1	Sandshoe - 4.50"x 10" x 10"
2	Sandshoe - 4.50"x 10"x 12"
3	Sandshoe - 2" x 10" x 10"
4	Sandshoe - 2" x 10" x 12"
5	Shockfoot - DIA 12"
8	Shockfoot - DIA 10"
M	Sandshoe HD - 4.50"x 12"x 12"
X	R.C.F. - 10"x 10"

LG5 X X X - X X X X X X X X X

TRAVEL	
NO.	DESCRIPTION
3	13.50"
5	15.50"
7	17"
9	19"

LEG ASSY	
NO.	DESCRIPTION
0	Sets
1	Left Hand
2	Right Hand

RETRACT TUBE	
NO.	DESCRIPTION
0	Standard
5	R.C.F. MRL
6	Shock Can
9	Special

GREASE	
NO.	DESCRIPTION
0	Standard Pack
3	Full Pack - GB & HD
7	Std. Pack & PermaLube
9	Special
Q	NoLube (Permanently Lubricated)
R	NoLube Per Block "Q" & Enhanced Screw Lube
S	10 Year Warranty Per Block "Q" & LG0128 - Shockfoot or RCF Req'd.
T	10 Year Warranty Per Block "S" - Enhanced Lubrication On Screw

LOG NO.	ACCESSORY NO.
Contact SAF-HOLLAND Customer Service for Special Options & Accessories	

 Amendments and errors reserved. © SAF-HOLLAND, Inc.

SAF-HOLLAND Group

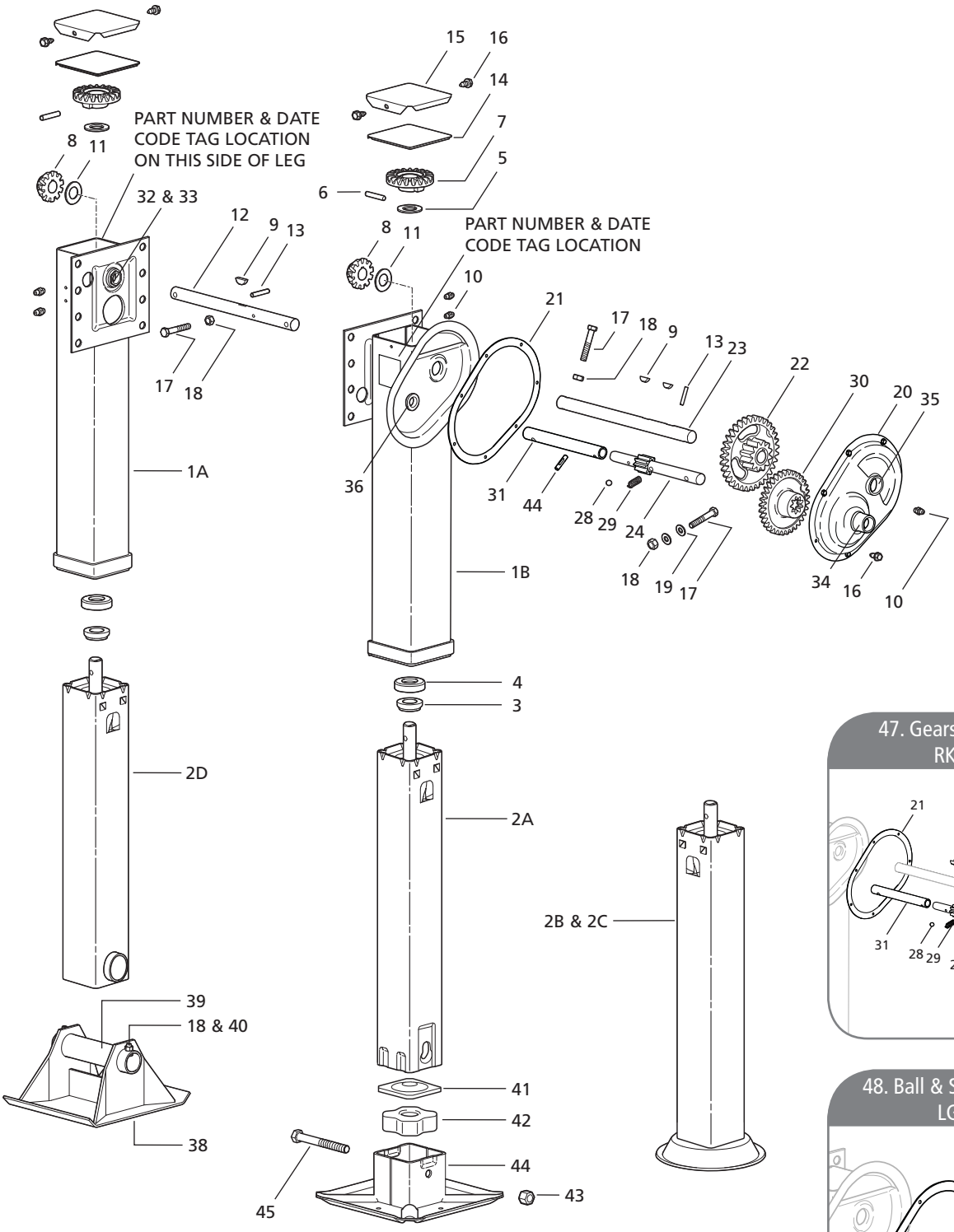

47. Gears Replacement Kit RK-11074-01

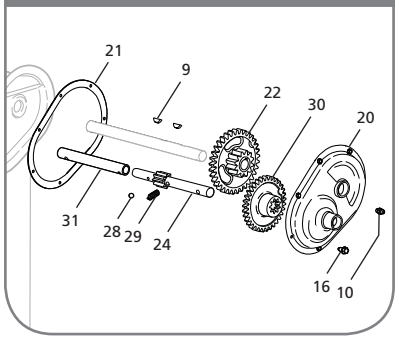

48. Ball & Spring Replacement LG2145-999

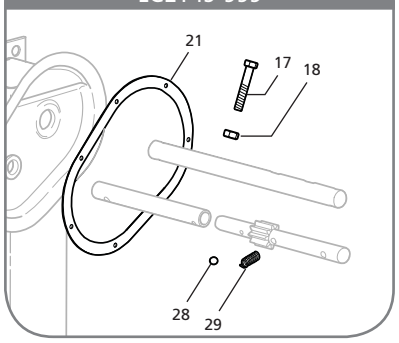

NOTE: CLOTH BAG & UTILITY CLOTH INCLUDED (NOT SHOWN)

DISCONTINUED MODEL SERVICE PARTS ONLY
Please contact Customer Service for part availability
800.876.3929

XL-LG11389PM-en-US Rev F 08-2014 Amendments and errors reserved. © SAF-HOLLAND, Inc.

NO.	DESCRIPTION	PART NO.	SPEED	
			ONE	TWO
1A	Upper Housing LH	N/A	1	-
1B	Upper Housing RH	N/A	-	1
2A	Retract Tube - RCF	N/A	1	1
2B	Retract Tube - 10" Shockfoot	N/A	1	1
2C	Retract Tube - 12" Shockfoot	N/A	1	1
2D	Retract Tube - Sandshoe	N/A	1	1
3	Collar	XB-LG0544	1	1
4	Thrust Bearing	XB-BRG-013-77	1	1
5	Washer - FL 2"OD x 1.19" ID x .13" THK	XB-PW-016-62	1	1
6	Pin - .38" x 2.00"	XA-CRP-V-06635	1	1
7	Bevel Gear	XA-LG0570-01	1	1
8	Pinion Gear	XB-LG1823-01	1	1
9	Woodruff Key - .25" x .82"	XB-KEY-018-02	1	2
10	Grease Fitting - .25"-28 - Self-Tapping	XB-GRF-022-16	2	3
11	Washer - FL 1.88"OD x 1.02"ID x .63"THK	XB-PW-016-19	1	1
12	Jack Shaft LH - Universal Mount	LG0927	1	-
	- I-Beam Mount	LG0946	1	-
	- Conventional Mount	LG0946-02	1	-
	- Reverse Mount	LG0948	1	-
13	Spring Pin - .25" x 1.50"	XB-SP-014-27	1	1
14	Gasket	XB-LG0893	1	1
15	Cover	XA-LG0880	1	1
16	Self-Tapping Screw - .25"-20 x .50" Lg	XB-STS-008-11	2	9
17	Screw - Hex Cap - .38"-16 x 2.25" Lg GR5	XB-HHC-050-42	1	2
18	Self-Locking Nut - .38"-16	XB-SLN-012-04	2	3
19	Washer - .38" Std Type A	XB-PW-016-03	-	2
20	Gearbox Half - Outside w/Hole for Greasefitting	LG0944-100	-	1
21	Gearbox Gasket	XB-LG0891	-	1
22	Output Gear	LG0936-51	-	1
23	Jack Shaft RH - Universal Mount	LG2147	-	1
	- I-Beam Mount	LG2187	-	1
	- Conventional Mount	LG2187-01	-	1
	- Reverse Mount	LG2197	-	1
24	Input Gear - Low - Universal, I-Beam, Conv. Mount	LG2463-01	-	1
	- Reverse Mount	LG2464-01	-	1
28	Shift Lock Ball	XB-BAL-023-07	-	1
29	Shift Lock Spring	XB-SPG-020-36	-	1
30	Input Gear - High	LG2465-01	-	1
31	Shift Shaft Extension - Universal, Reverse	LG2462	-	1
32	Retainer - Hex Lock	LG2094	2	1
33	Boss - Hex Lock	LG2095	2	1
34	Shift Lock Boss	XB-LG0658-01	-	1
35	Gearbox Boss	XB-LG0659-01	-	1
36	Gearbox Boss - Inside Half	XB-LG0931	-	1
38	Sandshoe - 10" x 10" x 4.50"	LG0055	1	1
	- 10" x 12" x 4.50"	LG0050	1	1
	- 10" x 10" x 2"	LG0056	1	1
	- 10" x 12" x 2"	LG0051	1	1
39	Sandshoe Axle - Hollow Axle 8.50" Lg	LG0070-02	1	1

NO.	DESCRIPTION	PART NO.	SPEED	
			ONE	TWO
40	Screw - Hex Cap - .38"-16 x .75" GR5	XB-HHC-050-69	1	1
41	Cushion Foot Plate	LG0725	1	1
42	Cushion Foot Rubber	XB-LG0726	1	1
43	Bolt - Hex Head - .63"-11 x 5.50"	XB-HHB-050-70	1	1
44	R.C.F. - 10" x 10"	LG0718-01	1	1
	- DIA 12"	LG0740-01	1	1
	- DIA 10"	LG0732-01	1	1
45	Self-Locking Nut - .63"-11	XB-SP0012-10	1	1
46	Groove Pin - .25" x 1.13" Type E - Univ & Rev.	XB-GP-052-49	-	1
47	Gears Replacement Kit	RK-11074-01	-	1
48	Ball & Spring Replacement Kit	LG2145-999	-	1
55	Oil Seal	XB-SEL-030-17	-	1

For technical assistance please go to www.safholland.us or call 800.876.3929

 Amendments and errors reserved. © SAF-HOLLAND, Inc.

SAF-HOLLAND Group

NoLube™

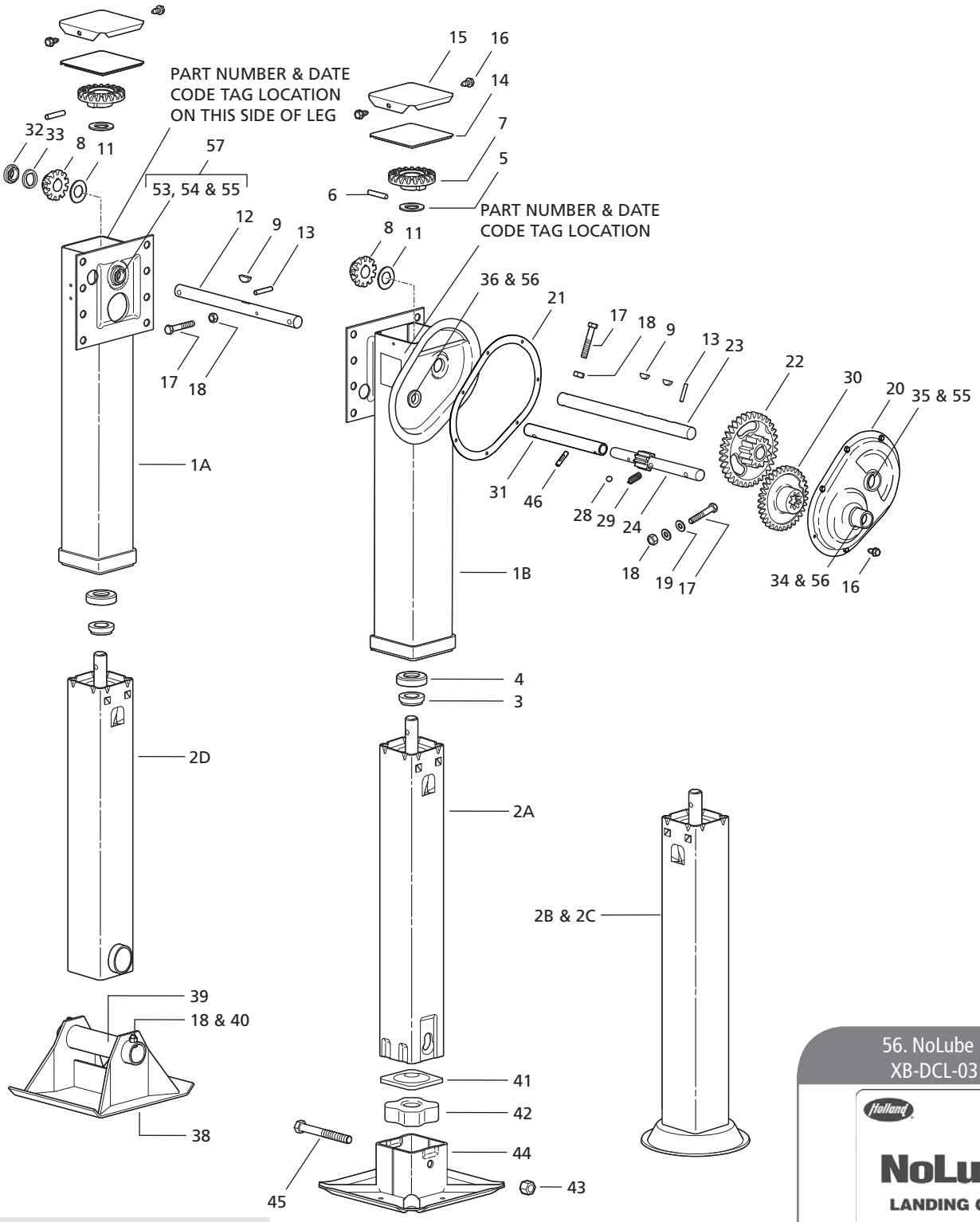

DISCONTINUED MODEL SERVICE PARTS ONLY
Please contact Customer Service for part availability
800.876.3929

56. NoLube Decal
XB-DCL-031-67

XL-LG11389PM-en-US Rev F 08-2014 Amendments and errors reserved. © SAF-HOLLAND, Inc.

NO.	DESCRIPTION	PART NO.	SPEED	
			ONE	TWO
1A	Upper Housing LH	N/A	1	-
1B	Upper Housing RH	N/A	-	1
2A	Retract Tube - RCF	N/A	1	1
2B	Retract Tube - 10" Shockfoot	N/A	1	1
2C	Retract Tube - 12" Shockfoot	N/A	1	1
2D	Retract Tube - Axle	N/A	1	1
3	Collar	XB-LG0544	1	1
4	Thrust Bearing	XB-BRG-013-77	1	1
5	Washer - FL 2"OD x 1.19" ID x .13"THK	XB-PW-016-62	1	1
6	Groove Pin - DIA .38" x 2"	XA-CRP-V-06635	1	1
7	Bevel Gear	XA-LG0570-01	1	1
8	Pinion Gear	XB-LG1823-01	1	1
9	Woodruff Key - .25" x .88"	XB-KEY-018-02	1	2
11	Washer - 1.88"OD x 1.02"ID x .63"THK	XB-PW-016-19	1	1
12	Jack Shaft LH - Universal Mount	LG0927	1	-
	- I-Beam Mount	LG0946	1	-
	- Conventional Mount	LG0946-02	1	-
	- Reverse Mount	LG0948	1	-
13	Spring Pin - .25" x 1.50"	XB-SP-014-27	1	1
14	Cover Gasket	XB-LG0893	1	1
15	Top Cover	XA-LG0880	1	1
16	Self-Tapping Screw - .25"-20 x .50" Lg	XB-STS-008-11	2	9
17	Screw - Hex Cap - .38"-16 x 2.25 GR5	XB-HHC-050-42	1	2
18	Self-Locking Nut - .38"-16	XB-SLN-012-04	2	3
19	Washer - .38 Std Type A	XB-PW-016-03	-	2
20	Gearbox Half - Outside w/Hole for Greasefitting	LG0944-10	-	1
21	Gearbox Gasket	XB-LG0891	-	1
22	Output Gear	LG0936-51	-	1
23	Jack Shaft RH - Universal Mount	LG2147	-	1
	- I-Beam Mount	LG2187	-	1
	- Conventional Mount	LG2187-01	-	1
	- Reverse Mount	LG2197	-	1
24	Input Gear - Low - Universal, I-Beam, & Conv. Mount	LG2463-01	-	1
	- Low - Reverse Mount	LG2464-01	-	1
28	Shift Lock Ball	XB-BAL-023-07	-	1
29	Shift Lock Spring	XB-SPG-020-36		1
30	Input Gear - High	LG2465-01	-	1
31	Shift Shaft Extension - Universal & Reverse	LG2462	-	1
32	Retainer - Hex Lock	XB-LG1570	1	-
33	Boss - Hex Lock w/Seals	LG0559-10	1	-
34	Shift Lock Boss	XB-LG0658-01	-	1
35	Gearbox Boss	XB-LG0659-01	-	2
36	Gearbox Boss - Inside Half	XB-LG0931	-	1
38	Sandshoe - 10" x 10" x 4.50"	LG0055	1	1
	- 10" x 12" x 4.50"	LG0050	1	1
	- 10" x 10" x 2"	LG0056	1	1
	- 10" x 12" x 2"	LG0051	1	1
39	Sandshoe Axle - Hollow Axle - 8.50 Lg	LG0070-02	1	1

NO.	DESCRIPTION	PART NO.	SPEED	
			ONE	TWO
40	Screw - Hex Cap - .38"-16 x .75" GR5	XB-HHC-050-69	1	1
41	Cushion Foot Plate	LG0725	1	1
42	Cushion Foot Rubber	XB-LG0726	1	1
43	Bolt - Hex Head - .63"-11 x 5.50"	XB-HHB-050-70	1	1
44	R.C.F. - 10" x 10"	LG0732-01	1	1
	- DIA 10"	LG0718-01	1	1
	- DIA 12"	LG0740-01	1	1
45	Self-Locking Nut - .63"-11	XB-SP0012-10	1	1
46	Groove Pin - .25" x 1.13" Type E	XB-GP-052-49	-	1
53	Bushing	XB-LG0219-02	1	1
54	Boss - Short	LG1326	1	1
55	Oil Seal	XB-SEL-030-17	1	3
56	Oil Seal	XB-SEL-030-18	-	1
57	Bearing Boss Ass'y. w/Oil Seal	LG1367-10	1	1
58	NoLube Decal	XB-DCL-031-67	-	1

For technical assistance please go to www.safholland.us or call 800.876.3929

 Amendments and errors reserved. © SAF-HOLLAND, Inc.

SAF-HOLLAND Group

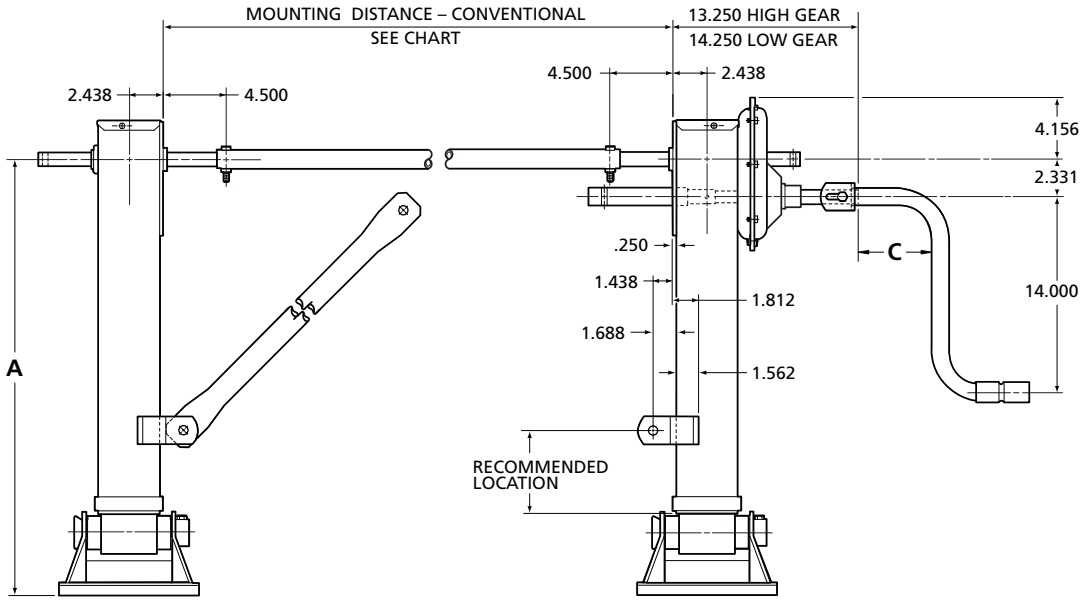

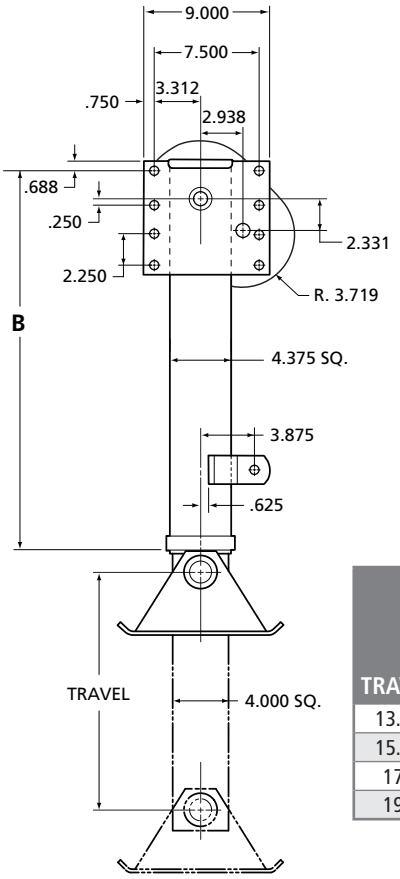

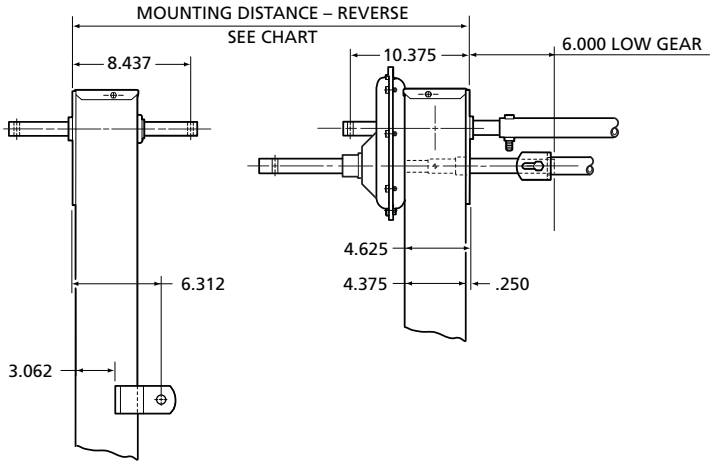

FG4000 DIMENSIONS

TRAVEL	10x10x4.50 & 10x12x4.50 Sandshoe		10x10x2 & 10x12x2 Sandshoe		SHOCKFOOT		SHOCKFOOT SHOCK CAN		R.C.F. - STD		R.C.F - MRL		CRANK PART NO.	"C"
	"A"	"B"	"A"	"B"	"A"	"B"	"A"	"B"	"A"	"B"	"A"	"B"		
13.5"	28.69	25.56	26.19	25.56	29.00	28.56	N/A	N/A	27.25	25.56	27.25	25.56	LG0083-01	5.25
15.5"	29.69	26.56	27.19	26.56	N/A	N/A	N/A	N/A	28.25	26.56	28.25	26.56	LG0083-03	10.88
17"	31.19	28.06	28.69	28.06	31.75	30.06	28.75	28.06	31.75	30.06	29.75	28.06		
19"	33.69	30.06	31.19	30.06	34.25	30.56	N/A	N/A	32.38	30.06	N/A	N/A	LG0083-05	16.88

MOUNTING DISTANCES

REVERSE MOUNTING DISTANCE	96" WIDE TRAILER	102" WIDE TRAILER
Maximum	84.00	90.00
Minimum - LG0083-01	78.00	84.00
Minimum - LG0083-03	66.75	72.75
Minimum - LG0083-05	54.75	60.75

CONVENTIONAL MOUNTING DISTANCE	96" WIDE TRAILER	102" WIDE TRAILER
Maximum	67.50	73.50
Minimum - LG0083-01	61.50	67.50
Minimum - LG0083-03	50.25	56.25
Minimum - LG0083-05	38.25	44.25

XL-LG11389PM-en-US Rev F 08-2014 Amendments and errors reserved. © SAF-HOLLAND, Inc.

Service Parts Only.

Individual Legs and Sets are no longer available.
Ordering Code provided for reference only.

LANDING GEAR	
NO.	MODEL
FG4	FG4000 Fast Gear

MOUNTING	
NO.	DESCRIPTION
0	Univ. Mt. - .66"
1	Conv. Mt. - .66"
4	I-Beam Mt. - .66"
8	Reverse Mt. - .66"
9	Special
A	Univ. Mt. - .53"
B	Conv. Mt - .53"
H	I-Beam Mt. - .53"
L	Reverse Mt. - .53"

SHAFTS	
NO.	DESCRIPTION
0	Universal
1	Reverse
2	I-Beam
9	Conventional
A	I-Beam - 10"
J	Universal EZ-Shift
K	Conventional EZ-Shift
L	Reverse EZ-Shift
M	I-Beam EZ-Shift

FOOTWARE	
NO.	DESCRIPTION
0	No Footware
1	Sandshoe - 4.50"x 10" x 10"
2	Sandshoe - 4.50"x 10"x 12"
3	Sandshoe - 2" x 10" x 10"
4	Sandshoe - 2" x 10" x 12"
5	Shockfoot - DIA 12"
8	Shockfoot - DIA 10"
A	R.C.F. - No Footware
B	R.C.F. - 10" x 10"
C	R.C.F. - DIA 10"
D	R.C.F. - DIA 12"
M	Sandshoe HD - 4.50"x 12"x 12"
R	R.C.F. - 12" x 12"

FG4 X X X - X X X X X X X X X

TRAVEL	
NO.	DESCRIPTION
3	13.50"
5	15.50"
7	17"
9	19"

LEG ASSY	
NO.	DESCRIPTION
0	Sets
1	Left Hand
2	Right Hand

RETRACT TUBE	
NO.	DESCRIPTION
0	Standard
5	R.C.F MRL
6	Shock Can
9	Special

GREASE	
NO.	DESCRIPTION
0	Standard Pack
3	Full Pack - GB & HD
7	Std. Pack & PermaLube
9	Special
Q	NoLube (Permanently Lubricated)
R	NoLube Per Block "Q" & Enhanced Screw Lube
S	10 Year Warranty Per Block "Q" & LG0128 - Shockfoot or RCF Req'd.
T	10 Year Warranty Per Block "S" - Enhanced Lubrication On Screw

LOG NO.	ACCESSORY NO.
Contact SAF-HOLLAND Customer Service for Special Options & Accessories	

 Amendments and errors reserved. © SAF-HOLLAND, Inc.

SAF-HOLLAND Group

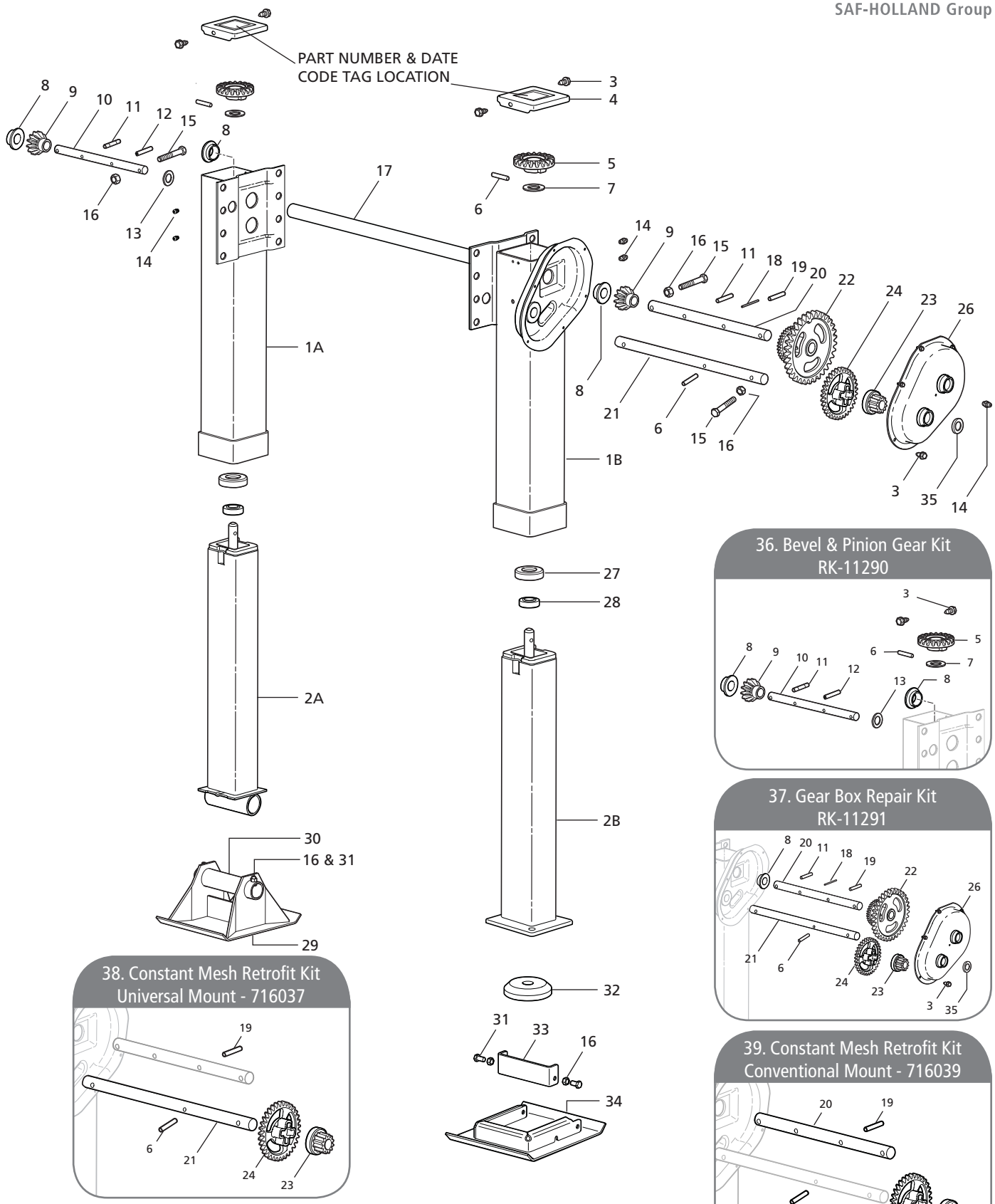

DISCONTINUED MODEL SERVICE PARTS ONLY
As of 07/2010 CMS2 model legs were replaced with the CLASSIC model.

XL-LG11389PM-en-US Rev F 08-2014 Amendments and errors reserved. © SAF-HOLLAND, Inc.

NO.	DESCRIPTION	PART NO.	SPEED	
			ONE	TWO
1A	Upper Leg Assy LH - 1-Speed	N/A	1	-
1B	Upper Leg Assy RH - 2-Speed	N/A	-	1
2A	Lower Leg Assy - Sandshoe	N/A	1	1
2B	Lower Leg Assy - Removable Cushion Foot	N/A	1	1
3	Self-Tapping Screw - .25"-20 x .50"	XB-STS-008-11	2	8
4	Cover - Square Leg	751612	1	1
	- Round Leg	751601	1	1
5	Bevel Gear	730590	1	1
6	Groove Pin - .31" x 1.50"	725046	1	2
7	Washer - Hardened	XB-PW-016-62	1	1
8	Shaft Bushing - Square Leg	724037	2	1
	- Round Leg	724036	2	1
9	Pinion Gear	730011	1	1
10	Jack Shaft LH - Universal Mount	750004	1	-
	- Conventional Mount	750450	1	-
	- Reverse Mount	750452	1	-
11	Spring Pin - .38" x 1.38"	725002	1	1
12	Spring Pin - .25" x 1.25"	725001	1	-
13	Flat Washer	XB-PW-016-13	1	-
14	Grease Fitting	727000	2	3
15	Hex Cap Screw - .38"-16 x 2.25"	XB-HHC-050-42	1	2
16	Self-Locking Nut - .38"-16 - Cross Drive Shaft	XB-SLN-012-04	1	2
	- .38"-16 - Sandshoe	XB-SLN-012-04	1	1
	- .38"-16 - RCF	XB-SLN-012-04	2	2
17	Cross Drive Shaft	LG0094-XXXX	1	-
18	Wire	729002	-	1
19	Spring Pin - .38" x 1.50"	725003	-	1
20	Jack Shaft RH - Universal Mount	750002	-	1
	- Conventional Mount	750241	-	1
	- Reverse Mount	750245	-	1
21	Shift Shaft - Universal & Reverse Mount	751175	-	1
	- Conventional Mount	751198	-	1
22	Output Gear	750009	-	1
23	Input Gear - Low	751173	-	1
24	Input Gear - High	751174	-	1
26	Outside Cover Assembly	741158	-	1
27	Collar - Elevating Screw	730007	1	1
28	Bearing	729108	1	1
29	Sandshoe - 10" x 10" x 4.50" - Code 444	50616001	1	1
	- 10" x 10" x 2.00" - Code 400	50616008	1	1
30	Sandshoe Axle - Hollow Axle 8.50" Lg.	LG0070-02	1	1
31	Hex Cap Screw - .38"-16 x .75" - Sandshoe	XB-HHC-050-69	1	1
	- .38"-16 x .75" - RCF	XB-HHC-050-69	2	2
32	Cushion Foot Pad - RCF	728003	1	1
33	Interchangeable Strap - RCF	730638	1	1
34	RCF - 10" x 10"	730640	1	1
35	Seal	728000	-	1
36	Bevel & Pinion Gear Repair Kit	RK-11290	1	1
37	Gear Box Repair Kit	RK-11291	-	1
38	Constant Mesh Retrofit Kit - Universal Mount	716037	-	1
39	Constant Mesh Retrofit Kit - Conventional Mount	716039	-	1

For technical assistance please go to www.safholland.us or call 800.876.3929

 Amendments and errors reserved. © SAF-HOLLAND, Inc.

SAF-HOLLAND Group

MOUNTING CONFIGURATION	"A"	"B"	"C"	"D"	"E" LOW GEAR	"E" HIGH GEAR	"F" LOW GEAR	"F" HIGH GEAR
Universal Mount	9.00	2.56	1.56	4.5	10.82	10.31	3.36	3.87
Outside Mount	No Hole	2.56	1.56	No Hole	10.82	10.31	No Hole	No Hole
Inside Mount	9.00	No Hole	No Hole	4.5	10.82	10.31	3.36	3.87

Outside Mounting
shown with Universal Shafts

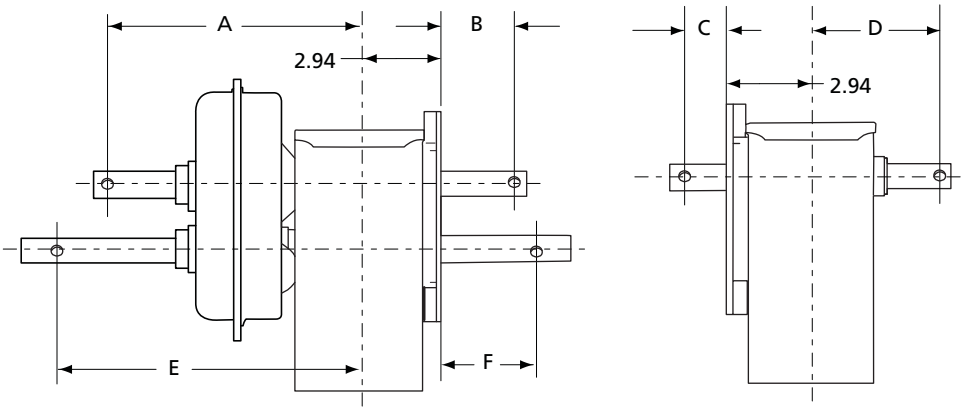

Inside Mounting
shown with Universal Shafts

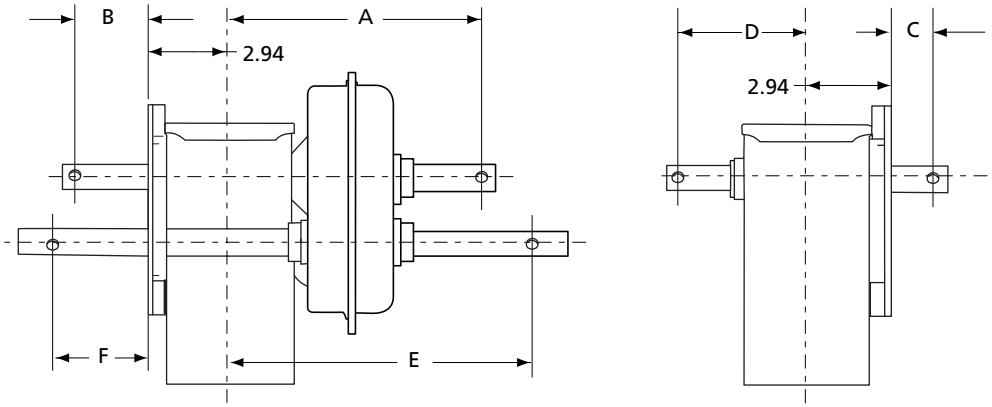

XL-LG11389PM-en-US Rev F 08-2014 Amendments and errors reserved. © SAF-HOLLAND, Inc.

THIS PAGE LEFT INTENTIONALLY BLANK

 Amendments and errors reserved. © SAF-HOLLAND, Inc.

SAF-HOLLAND Group

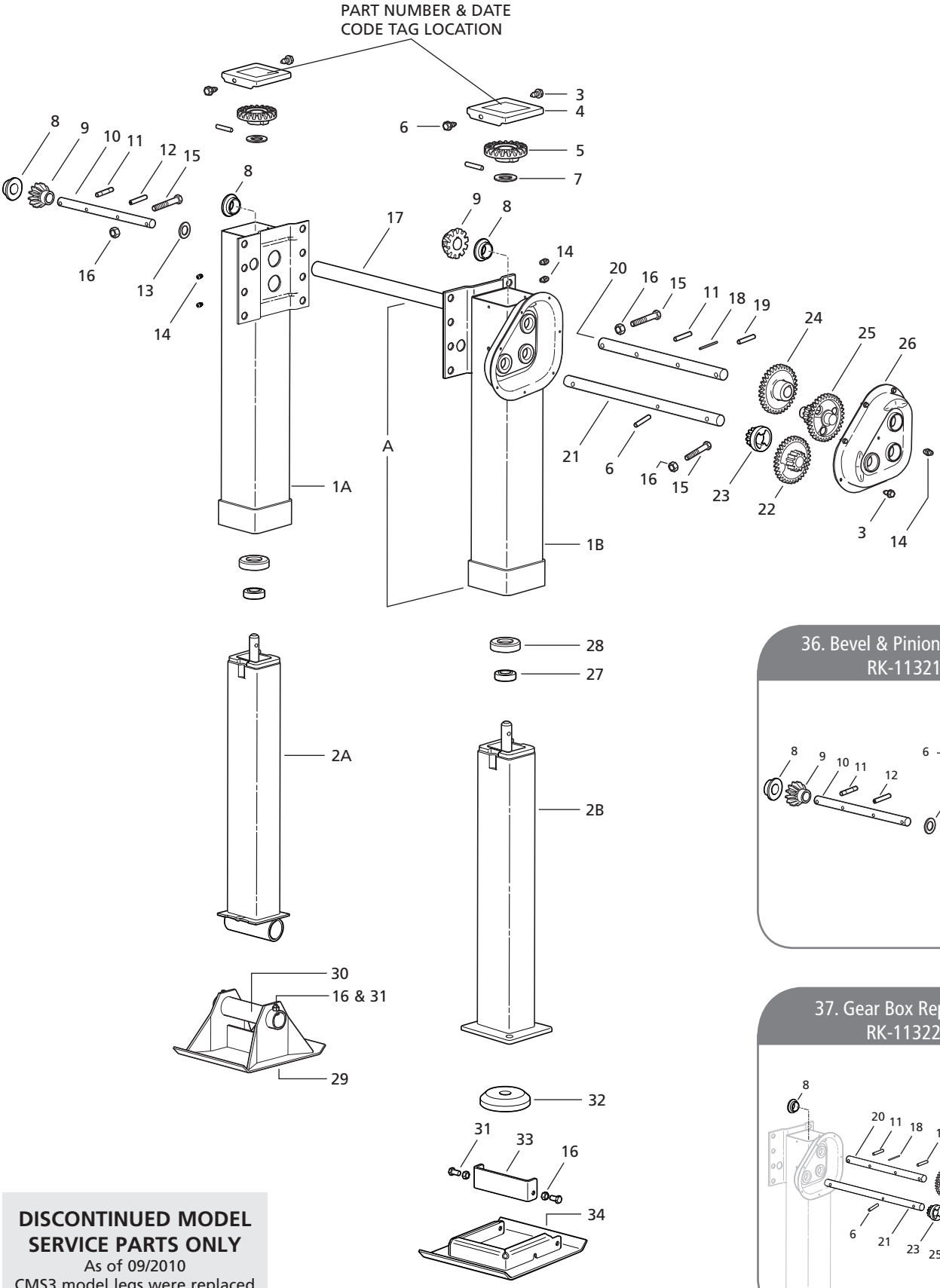

DISCONTINUED MODEL SERVICE PARTS ONLY
As of 09/2010
CMS3 model legs were replaced with the ATLAS 55 model.

36. Bevel & Pinion Gear Kit
RK-11321

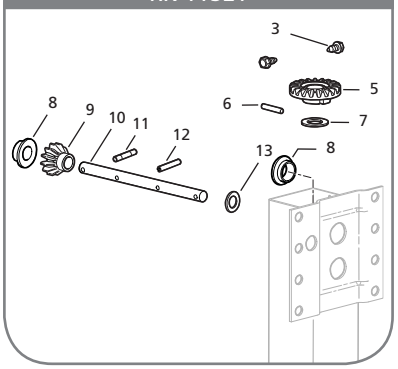

37. Gear Box Repair Kit
RK-11322

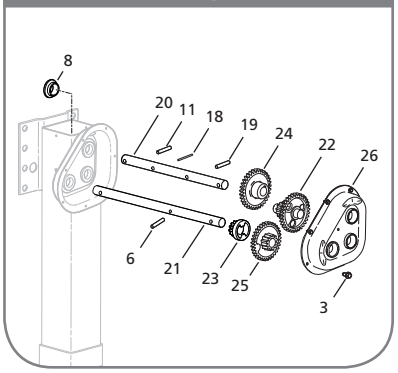

XL-LG11389PM-en-US Rev F 08-2014 Amendments and errors reserved. © SAF-HOLLAND, Inc.

NO.	DESCRIPTION	PART NO.	SPEED	
			ONE	TWO
1A	Upper Leg Assy - Sandshoe	N/A	1	-
1B	Upper Leg Assy - Removable Cushion Foot	N/A	-	1
2A	Lower Leg Assy - Sandshoe	N/A	1	1
2B	Lower Leg Assy - Removable Cushion Foot	N/A	1	1
3	Self-Tapping Screw	XB-STS-008-11	2	10
4	Cover	751612	1	1
5	Bevel Gear	130004	1	1
6	Groove Pin - .31″ x 1.50″	725046	1	2
7	Washer - Hardened	XB-PW-016-62	1	1
8	Shaft Bushing	724037	2	1
9	Pinion Gear	130003	1	1
10	Jack Shaft LH - Universal Mount	750004	1	-
	- Conventional Mount	750450	1	-
	- Reverse Mount	750452	1	-
11	Spring Pin - .38″ x 1.38″	725002	1	1
12	Spring Pin - .25″ x 1.25″	725001	1	-
13	Flat Washer	XB-PW-016-13	1	-
14	Grease Fitting	727000	2	3
15	Hex Cap Screw - .38″-16 x 2-14″	XB-HHC-050-42	1	2
16	Self-Locking Nut - .38″-16 - Cross Drive Shaft	XB-SLN-012-04	1	2
	- .38″-16 - Sandshoe	XB-SLN-012-04	1	1
	- .38″-16 - RCF	XB-SLN-012-04	2	2
17	Cross Drive Shaft	LG0094-XXXX	1	-
18	Wire	729002	-	1
19	Spring Pin - .38″ x 1.50″	725003	-	1
20	Jack Shaft RH - Universal Mount	180000	-	1
	- Conventional Mount	180010	-	1
	- Reverse Mount	180016	-	1
21	Shift Shaft - Universal & Reverse Mount	751175	-	1
	- Conventional Mount	751198	-	1
22	Output Gear	130002	-	1
23	Input Gear - Low	751173	-	1
24	Input Gear - High	130000	-	1
25	Idler Gear	130001	-	1
26	Outside Cover Assembly	160000	-	1
27	Collar - Elevating Screw	730007	1	1
28	Bearing	729108	1	1
29	Sandshoe - 10″ x 10″ x 4.50″	50616001	1	1
	- 10″ x 10″ x 2.00″	50616008	1	1
30	Sandshoe Axle - Hollow Axle - 8.50″ Lg	LG0070-02	1	1
31	Hex Cap Screw - .38″-16 x .75″ - Sandshoe	XB-HHC-050-69	1	1
	- .38″-16 x .75″ - RCF	XB-HHC-050-69	1	1
32	Cushion Foot Pad - RCF	728003	1	1
33	Interchangeable Strap - RCF	730638	1	1
34	RCF - 10″ x 10″	730640	1	1
36	Bevel & Pinion Gear Kit	RK-11321	1	1
37	Gear Box Repair Kit	RK-11322	1	1

For technical assistance please go to www.safholland.us or call 800.876.3929

 Amendments and errors reserved. © SAF-HOLLAND, Inc.

SAF-HOLLAND Group

CMS2 DIMENSIONS

	EXTENDED LENGTH (A)	RETRACTED LENGTH (B)	UPPER LEG (C)
REMOVABLE CUSHION FOOT			
14″ Travel (14.12″)	43.12″	29.00″	25.50″
17″ Travel (16.87″)	48.62″	31.75″	28.31″
19″ Travel (19.12″)	53.12″	34.00″	30.56″
4.5″ SANDSHOE			
14″ Travel (14.12″)	42.87″	28.75″	22.75″
17″ Travel (16.87″)	48.37″	31.50″	25.50″
19″ Travel (19.12″)	52.87″	33.75″	27.75″
2″ SANDSHOE			
14″ Travel (14.12″)	40.37″	26.25″	22.75″
17″ Travel (16.87″)	45.87″	29.00″	25.50″
19″ Travel (19.12″)	50.37″	31.25″	27.75″

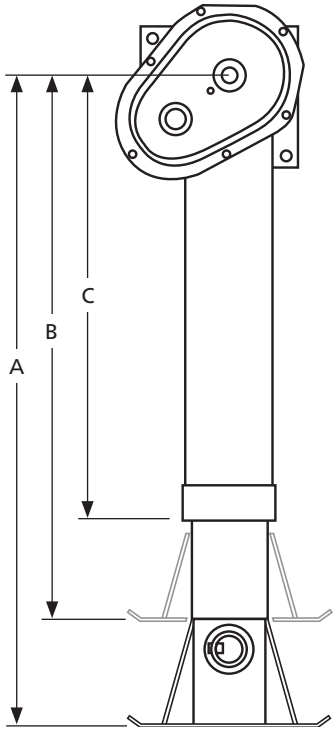

CMS3 DIMENSIONS

	EXTENDED LENGTH (A)	RETRACTED LENGTH (B)	UPPER LEG (C)
REMOVABLE CUSHION FOOT			
14″ Travel (14.12″)	43.12″	29.00″	25.50″
17″ Travel (16.87″)	48.62″	31.75″	28.31″
19″ Travel (19.12″)	53.12″	34.00″	30.56″
4.5″ SANDSHOE			
14″ Travel (14.12″)	42.87″	28.75″	22.75″
17″ Travel (16.87″)	48.37″	31.50″	25.50″
19″ Travel (19.12″)	52.87″	33.75″	27.75″
2″ SANDSHOE			
14″ Travel (14.12″)	40.37″	26.25″	22.75″
17″ Travel (16.87″)	45.87″	29.00″	25.50″
19″ Travel (19.12″)	50.37″	31.25″	27.75″

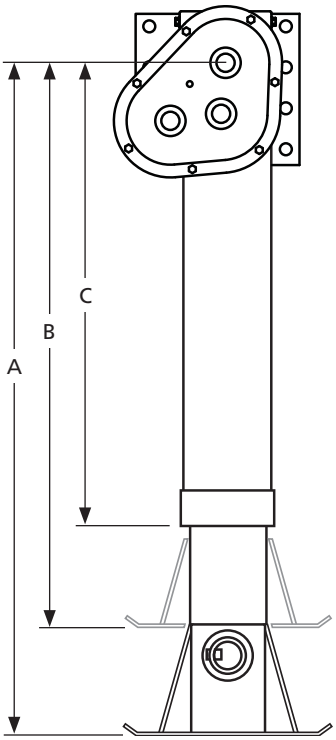

XL-LG11389PM-en-US Rev F 08-2014 Amendments and errors reserved. © SAF-HOLLAND, Inc.

Service Parts Only.

Individual Legs and Sets are no longer available.
For CMS2 Legs see CLASSIC model for replacement Legs and Sets.
For CMS3 Legs see ATLAS 55 model for replacement Legs and Sets.
Model Code provided for reference only.

STYLE	
NO.	DESCRIPTION
CMS	Constant Mesh Square

SHAFT	
NO.	DESCRIPTION
2	Two-Shaft
3	Three-Shaft

LENGTHS	
NO.	DESCRIPTION
1	14″ Travel
3	17″ Travel
5	19″ Travel

LUBRICATION	
NO.	DESCRIPTION
0	Std. Lubrication
2	Sealed Gearbox and Grease Tube
8	Maintenance Free

CMS X - X X - X X X - X X X

MOUNTING HOLE	
NO.	DESCRIPTION
102	DIA .66″ Holes (.63″ Fastener)

FOOTWARE	
NO.	DESCRIPTION
305	Cushion Foot - DIA 10″
309	Cushion Foot - DIA 13.5″
317	Cushion Foot - 10″ x 10″ Removable
400	Sand Shoe - 10″ x 10″ x 2.0″
408	Sand Shoe - 12″ x 12″ x 4.5″ w/Solid Axle
409	Sand Shoe - 12″ x 12″ x 2.0″ w/Solid Axle
444	Sand Shoe - 10″ x 10″ x 4.5″

 Amendments and errors reserved. © SAF-HOLLAND, Inc.

SAF-HOLLAND Group

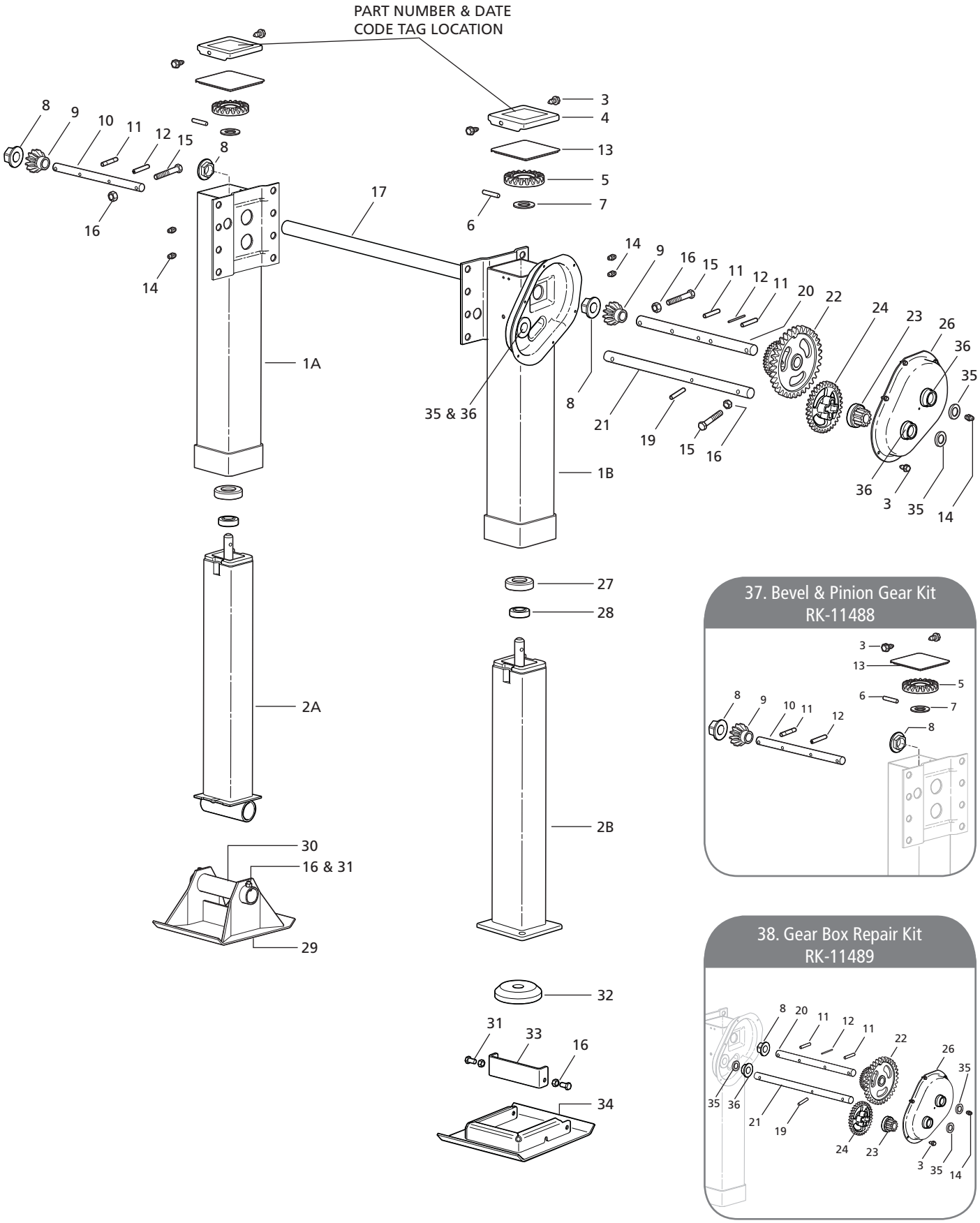

37. Bevel & Pinion Gear Kit
RK-11488

38. Gear Box Repair Kit
RK-11489

XL-LG11389PM-en-US Rev F 08-2014 Amendments and errors reserved. © SAF-HOLLAND, Inc.

NO.	DESCRIPTION	TRAVEL	
		17″	19″
2A	Lower Leg Assy - Sandshoe	LG3012-03	LG3012-04
2B	Lower Leg Assy - Low Profile RCF	LG-742913	LG-742927

NO.	DESCRIPTION	PART NO.	SPEED	
			ONE	TWO
1A	Upper Leg Assy LH	N/A	1	-
1B	Upper Leg Assy RH	N/A	-	1
3	Self-Tapping Screw - .25″-20 x .50″	XB-STS-008-11	2	8
4	Cover	XA-LG0880	1	1
5	Bevel Gear	LG2884	1	1
6	Pin - .38″ x 2″	XA-CRP-V-06635	1	1
7	Flat Washer	XB-PW-016-62	1	1
8	Hex Lock Boss	LG2926	2	1
9	Pinion Gear	LG1823-02	1	1
10	Jack Shaft LH - Universal Mount	LG-750004-01	1	-
	- I-Beam	LG-750004-04	1	-
	- Extended I-Beam	LG-750004-05	1	-
	- Conventional Mount	LG-750004-02	1	-
	- Reverse Mount	LG-750004-03	1	-
11	Groove Pin - DIA .38″ x .50″ - Type E	XB-GP-014-18	1	2
12	Spring Pin - DIA .25″ x 1.50″	XB-SP-014-27	1	1
13	Cover Gasket	XB-LG0893	1	1
14	Grease Fitting	XB-GRF-022-16	2	3
15	Hex Head Screw - .38″-16 x .25″ GR 5	XB-HHC-050-42	1	2
16	Self-Locking Nut - .38″-16 Grade B - Cross Drive Shaft	XB-SLN-012-04	1	2
	- .38″-16 Grade B - Sandshoe	XB-SLN-012-04	1	1
	- .38″-16 Grade B - Low Profile RCF	XB-SLN-012-04	2	2
17	Cross Drive Shaft	LG0094-XXXX	1	-
19	Groove Pin - .31″ x 1.50″	725046	-	1
20	Jack Shaft RH - Universal Mount	LG-750002-01	-	1
	- I-Beam	LG-750002-04	-	1
	- Extended I-Beam	LG-750002-05	-	1
	- Conventional Mount	LG-750002-02	-	1
	- Reverse Mount	LG-750002-03	-	1
21	Shift Shaft - Universal Mount	LG-751175-01	-	1
	- Conventional Mount & I-Beam	LG-751175-02	-	1
	- Reverse Mount	LG-751175-03	-	1
22	Output Gear	750009	-	1
23	Input Gear - Low	751173	-	1
24	Input Gear - High	751174	-	1
26	Gearbox Assy - Outside Half	LG-741158	-	1
27	Thrust Bearing	XB-BRG-013-77	1	1
28	Collar	XB-LG0544	1	1
29	Sandshoe - 10″ x 10″ x 4.5″	LG0055	1	1
	- 10″ x 10″ x 2.0″	LG0056	1	1
30	Axle Assy	LG0070-02	1	1
31	Hex Cap Screw - .38″-16 x .75″ GR 5 - Sandshoe	XB-HHC-050-69	1	1
	- .38″-16 x 1″ GR - Low Profile RCF	201205	2	2
32	Rubber Pad	728003	1	1
33	Strap	730638	1	1
34	Low Profile RCF - 10″ x 10″	730640	1	1
35	Oil Seal - 1″ Shaft	XB-SEL-030-17	-	3
36	Gear Box Boss	LG0659	-	3
37	Bevel & Pinion Gear Kit - Universal	RK-11488	1	1
38	Gear Box Repair Kit - Universal	RK-11489	-	1
39	Black Armour™ Touchup Kit (not shown)	RK-10919	1	1

For technical assistance please go to www.safholland.us or call 800.876.3929

 Amendments and errors reserved. © SAF-HOLLAND, Inc.

SAF-HOLLAND Group

CLASSIC DIMENSIONS

	EXTENDED LENGTH (A)	RETRACTED LENGTH (B)	UPPER LEG (C)
REMOVABLE CUSHION FOOT LOW PROFILE			
14″ Travel (14.12″)	43.12″	29.00″	25.50″
17″ Travel (16.87″)	46.00″	29.10″	28.31″
19″ Travel (19.12″)	48.85″	29.72″	27.75″
4.5″ SANDSHOE			
14″ Travel (14.12″)	42.87″	28.75″	22.75″
17″ Travel (16.87″)	48.50″	31.50″	25.50″
19″ Travel (19.12″)	52.87″	33.75″	27.75″
2″ SANDSHOE			
14″ Travel (14.12″)	40.37″	26.25″	22.75″
17″ Travel (16.87″)	46.00″	29.00″	25.50″
19″ Travel (19.12″)	50.37″	31.25″	27.75″

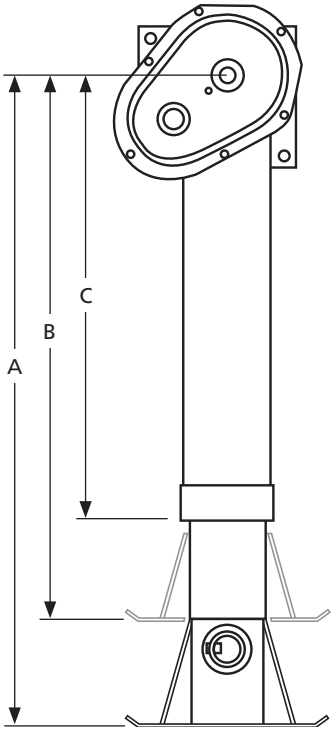

XL-LG11389PM-en-US Rev F 08-2014 Amendments and errors reserved. © SAF-HOLLAND, Inc.

LANDING GEAR	
NO.	MODEL
LG2	CLASSIC

MOUNTING	
NO.	DESCRIPTION
T	Two- Shaft Constant Mesh

SHAFTS	
NO.	DESCRIPTION
0	Universal
1	Reverse
2	I-Beam 6.5″
9	Conventional
A	I-Beam 10″

FOOTWARE	
NO.	DESCRIPTION
1	Sandshoe - 4.50″x 10″ x 10″
3	Sandshoe - 2″ x 10″ x 10″
Z	Low-Profile RCF - 10″ x 10″

LG2 T 0 X - 7 X 0 0 X X X X X

TRAVEL	
NO.	DESCRIPTION
7	17″
9	19″

LEG ASSY	
NO.	DESCRIPTION
0	Sets
1	Left Hand
2	Right Hand

RETRACT TUBE	
NO.	DESCRIPTION
0	Standard

GREASE	
NO.	DESCRIPTION
0	Standard Pack

LOG NO.	ACCESSORY NO.
Contact SAF-HOLLAND Customer Service for Special Options & Accessories	

 Amendments and errors reserved. © SAF-HOLLAND, Inc.

SAF-HOLLAND Group

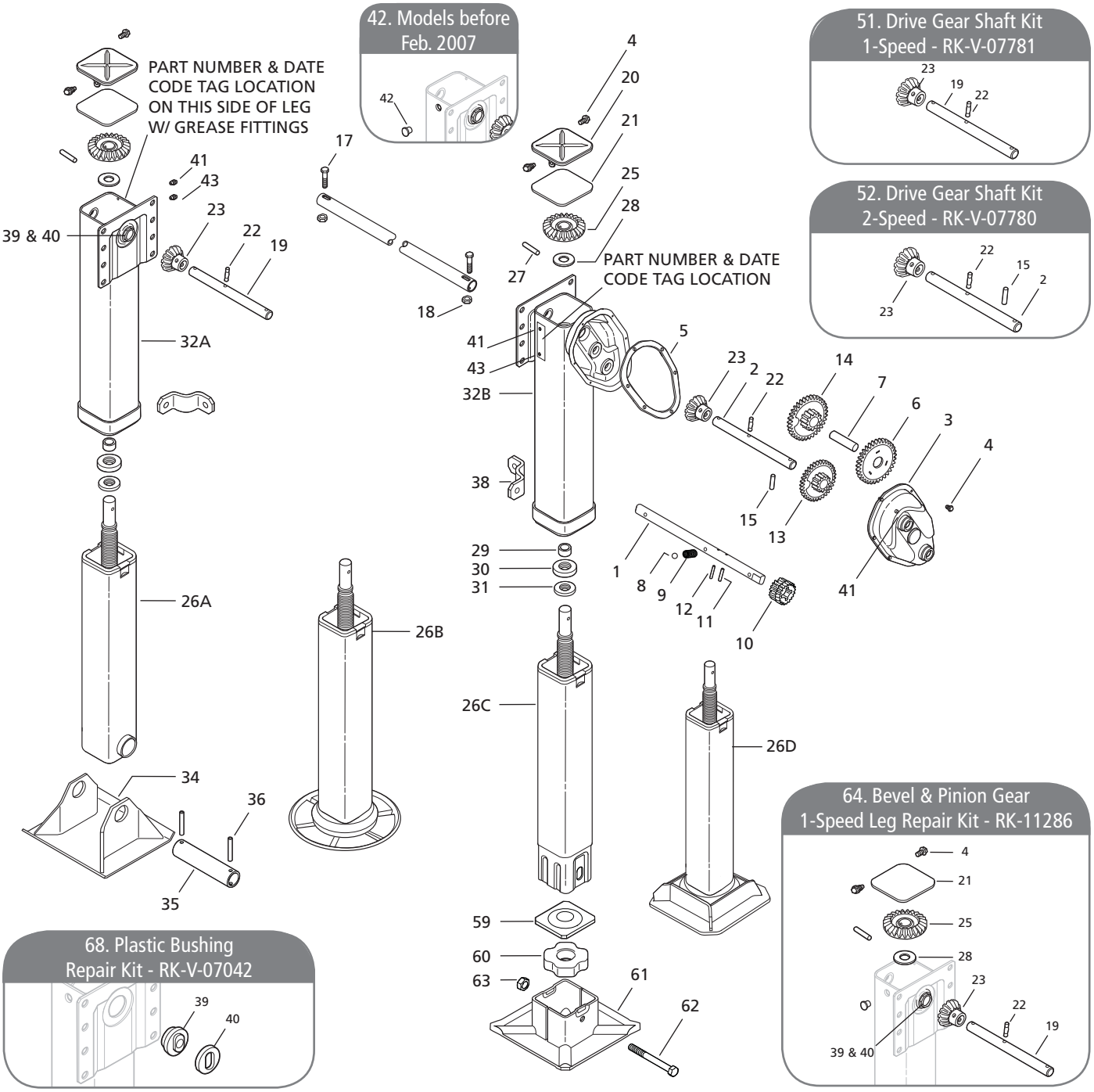

XL-LG11389PM-en-US Rev F 08-2014 Amendments and errors reserved. © SAF-HOLLAND, Inc.

NO.	DESCRIPTION	PART NO.	SPEED	
			ONE	TWO
1	Shift Shaft RH - Universal	XA-V-06625-A	-	1
	- I-Beam	XA-V-06625-C	-	1
	- Extended I-Beam	XA-V-06625-F	-	1
	- Conventional	XA-V-06625-C	-	1
	- Reverse	XA-V-06625-B	-	1
2	Jack Shaft RH - Universal	XA-V-06624-A	-	1
	- I-Beam	XA-V-06624-D	-	1
	- Extended I-Beam	XA-V-06624-F	-	1
	- Conventional & Reverse	XA-V-06624-C	-	1
3	Gearbox Cover Assembly	XA-V-06618	-	1
4	Thread Rolling Screw	XB-06372	2	8
5	Gearbox Gasket	XB-V-06621	-	1
6	Idler Gear	XA-V-06602	-	1
7	Idler Gear Shaft	XA-V-07085	-	1
8	Ball	XB-BAL-023-01	-	1
9	Spring	XB-SPG-020-02	-	1
10	Input Gear - Low	XA-V-06604-1	-	1
11	Pin - .25" x 1.44"	XA-CRP-V-06633	-	1
12	Spring Pin - .22" x 1.50"	XB-21-S-218-1500	-	1
13	Input Gear - High	XA-V-06606	-	1
14	Output Gear	XA-V-06603	-	1
15	Pin - .38" x 1.5"	XA-CRP-V-06634	-	1
17	HHCS - .38"-16 x 2.00"	XB-V-444-4	1	1
18	Lock Nut - .38"-16	XB-338	1	1
19	Jack Shaft LH - Universal	XA-V-06623-A	1	-
	- I-Beam	XA-V-06623-D	1	-
	- Extended I-Beam	XA-V-06623-F	1	-
	- Conventional	XA-V-06623-C	1	-
	- Reverse	XA-V-06623-B	1	-
20	Upper Leg Cover	XA-V-06611	1	1
21	Gasket	XB-V-07054	1	1
22	Groove Pin .38" x 1.50"	XB-GP-38-1-12-E	1	1
23	Pinion Gear	XA-V-06600	1	1
25	Bevel Gear	XA-V-06601	1	1
26A	Inner Leg & Screw Assy. - Axle	SEE PAGE 1-54	1	1
	- AXLGHD	SEE PAGE 1-54	1	1
26B	Inner Leg & Screw Assy. - Self-Leveling	SEE PAGE 1-54	1	1
	- Self-Leveling HD	SEE PAGE 1-54	1	1
26C	Inner Leg & Screw Assy. - RCF	SEE PAGE 1-54	1	1
	- RCF HD	SEE PAGE 1-54	1	1
26D	Inner Leg & Screw Assy. - Shock Foot	SEE PAGE 1-54	1	1
	- Shock Foot HD	SEE PAGE 1-54	1	1
27	Pin - .38" x 2"	XA-CRP-V-06635	1	1
28	Washer	XB-V-06632	1	1
29	Bushing	XB-V-06630	1	1
30	Thrust Bearing	XB-V-647	1	1
30	Thrust Bearing - Heavy Duty	XB-V-647-1	1	1
31	Collar	XA-V-06629	1	1
32A	Upper Leg - 1-Speed	NA	1	-
	- 1-Speed Heavy Duty (Not Shown)	NA	1	-
32B	Upper Leg - 2-Speed	NA	-	1
	- 2-Speed Heavy Duty (Not Shown)	NA	-	1
34	Skid Foot - 4.5" x 12" x 11.5"	LG0050	1	1
	- 2.0" x 12" x 11.5"	LG0051	1	1
	- 3.8" x 10" x 11.5"	XA-V-796-WS	1	1
	- 2.0" x 10" x 11.5"	LG0056	1	1
	- 4" x 12" x 16"	XA-HV-796	1	1

NO.	DESCRIPTION	PART NO.	SPEED	
			ONE	TWO
35	Standard Axle	XA-V-1901-1	1	1
	Solid Axle	XA-V-1903-1	1	1
36	Rollpin - .38" x 3"	XB-21-S-375-3000	2	2
38	Brace Lug	XA-V-1938	1	1
39	Bearing	XB-LG0559	2	1
40	Retainer	XB-LG1570	2	1
41	Lube Fitting	XB-767	1	2
42	Plastic Plug - Models before Feb. 2007	XB-01789	1	1
43	Lube Fitting w/Extension	XB-767-L	1	1
47	Crankshaft Bracket (Optional)	XA-V-971	-	1
48	Crank Hanger (Optional)	XB-V-1915	-	1
	Crank Hanger (Optional)	XB-LG0085	-	1
49	Extension Shaft - Long (Optional) - 15.44"	XA-V-1916	-	1
	- Short (Optional) - 8.94"	XA-V-1916-1	-	1
50	Crankshaft Coupling (Optional)	XA-V-630-2	-	1
51	Drive Gear Shaft Kit - 1-Speed	RK-V-07781	-	1
52	Drive Gear Shaft Kit - 2-Speed	RK-V-07780	-	1
53	Groove Pin - .38" x 1.38" (Optional)	XB-GP-38-138-5	-	2
54	Locknut - .25"-28 (Optional)	XB-3103	-	3
55	HHCS - .25"-28 x 3" (Optional)	XB-07618	-	3
56	Extension Bracket - Long - 15.56"	XA-V-07601-1	-	1
	- Short - 9.06"	XA-V-07601-2	-	1
57	Extension Bracket & Shaft Kit - Long - 15.56"	RK-V-07602-1	-	1
	- Short - 9.06"	RK-V-07602-2	-	1
58	Extension Bracket & Shaft Kit - Long - 15.44"	RK-V-1997-1	-	1
	- short - 8.94"	RK-V-1997-2	-	1
59	Cushion Foot Plate	LG1829	1	1
60	Rubber Cushion	XB-LG0713	1	1
61	Removable Cushion Foot	XA-V-796-RCF	1	1
62	Hex Head Screw - .63"-11 x 6" - GR2	XB-HHC-050-114	1	1
63	Top Lock Nut - .63"-11 - GR.C	XB-06179-2	1	1
64	Bevel & Pinion Gear Repair Kit	RK-11286	1	1
65	Gear Box Repair Kit	RK-11287	-	1
66	Black Armour™ Touchup Kit (not shown)	RK-10919	1	1

For technical assistance please go to www.safholland.us or call 800.876.3929

 Amendments and errors reserved. © SAF-HOLLAND, Inc.

Standard Duty Retract Tube Assemblies

NO.	DESCRIPTION	TRAVEL			
		9.9″	10.3″	12.5″	13.5″
26A	Retract Tube Assy - Axle	XA-V-06628-000-0	N/A	N/A	XA-V-06628-101-0
26B	Retract Tube Assy- Self Leveling	N/A	N/A	XA-V-06628-010-1	XA-V-06628-111-1
26C	Retract Tube Assy - RCF	N/A	XA-V-06628-020-2	N/A	XA-V-06628-121-2
26D	Retract Tube Assy - Shockfoot	N/A	N/A	XA-V-06628-010-5	XA-V-06628-111-5

Standard Duty Retract Tube Assemblies cont.

NO.	DESCRIPTION	TRAVEL			
		15.0″	16.5″	17.6″	18.7″
26A	Retract Tube Assy - Axle	XA-V-06628-202-0	XA-V-06628-303-0	XA-V-06628-404-0	XA-V-06628-505-0
26B	Retract Tube Assy- Self Leveling	XA-V-06628-212-1	XA-V-06628-313-1	XA-V-06628-414-1	XA-V-06628-515-1
26C	Retract Tube Assy - RCF	XA-V-06628-222-2	XA-V-06628-323-2	XA-V-06628-413-2	XA-V-06628-514-2
26D	Retract Tube Assy - Shockfoot	XA-V-06628-212-5	XA-V-06628-313-5	XA-V-06628-414-5	XA-V-06628-515-5

Heavy Duty Retract Tube Assemblies

NO.	DESCRIPTION	TRAVEL			
		9.9″	10.3″	12.5″	13.5″
26A	Retract Tube Assy - Axle	XA-H-06628-000-0	N/A	N/A	XA-H-06628-101-0
26B	Retract Tube Assy- Self Leveling	N/A	N/A	XA-H-06628-010-1	XA-H-06628-111-1
26C	Retract Tube Assy - RCF	N/A	XA-H-06628-020-2	N/A	XA-H-06628-121-2
26D	Retract Tube Assy - Shockfoot	N/A	N/A	XA-H-06628-010-5	XA-H-06628-111-5

Heavy Duty Retract Tube Assemblies cont.

NO.	DESCRIPTION	TRAVEL			
		15.0″	16.5″	17.6″	18.7″
26A	Retract Tube Assy - Axle	XA-H-06628-202-0	XA-H-06628-303-0	XA-H-06628-404-0	XA-H-06628-505-0
26B	Retract Tube Assy- Self Leveling	XA-H-06628-212-1	XA-H-06628-313-1	XA-H-06628-414-1	XA-H-06628-515-1
26C	Retract Tube Assy - RCF	XA-H-06628-222-2	XA-H-06628-323-2	XA-H-06628-413-2	XA-H-06628-514-2
26D	Retract Tube Assy - Shockfoot	XA-H-06628-212-5	XA-H-06628-313-5	XA-H-06628-414-5	XA-H-06628-515-5

XL-LG11389PM-en-US Rev F 08-2014 Amendments and errors reserved. © SAF-HOLLAND, Inc.

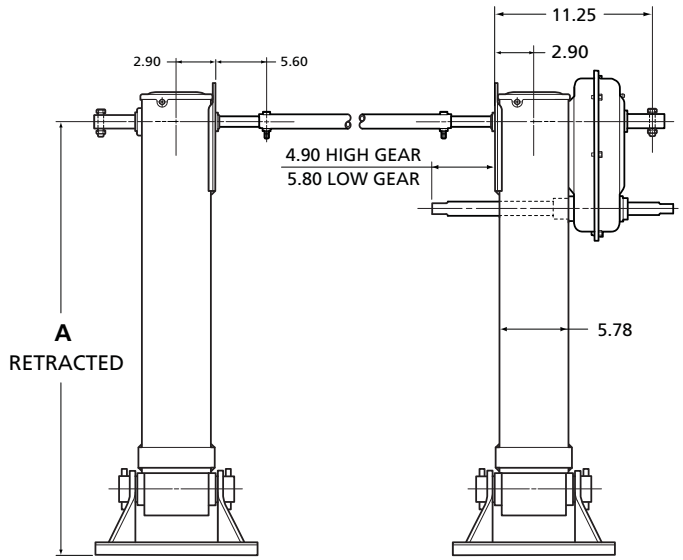

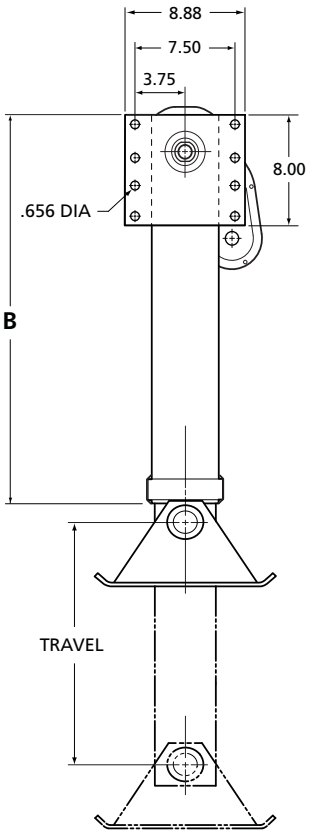

Self Leveling

TRAVEL	"A"	"B"
12.5"	37.0"	23.9
13.5"	41.3"	24.8
15.0"	44.3"	26.3
16.5"	47.3"	27.8
17.6"	49.5"	28.9
18.7"	51.8"	30.0

Std. Skid

TRAVEL	"A"	"B"
9.9"	37.9"	23.9
13.5"	42.2"	24.8
15.0"	45.2"	26.3
16.5"	48.2"	27.8
17.6"	50.5"	28.9
18.7"	52.7"	30.0

Low Profile

TRAVEL	"A"	"B"
9.9"	35.4"	23.9
13.5"	39.7"	24.8
15.0"	42.8"	26.3
16.5"	45.7"	27.8
17.6"	48.0"	28.9
18.7"	50.5"	30.0

Wt. Saver Skid

TRAVEL	"A"	"B"
9.9"	36.7"	23.9
13.5"	41.5"	24.8
15.0"	44.5"	26.3
16.5"	47.5"	27.8
17.6"	49.7"	28.9
18.7"	52.0"	30.0

RCF

TRAVEL	"A"	"B"
10.3"	36.8"	23.9
13.5"	41.1"	24.8
15.0"	44.1"	26.3
16.5"	47.1"	27.8
17.6"	49.3"	28.9
18.7"	51.5"	30.0

'A' Universal Mounting

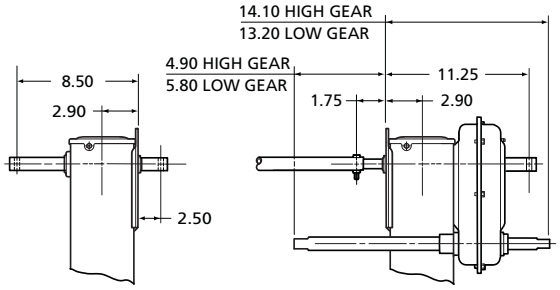

'B' Inboard Mounting

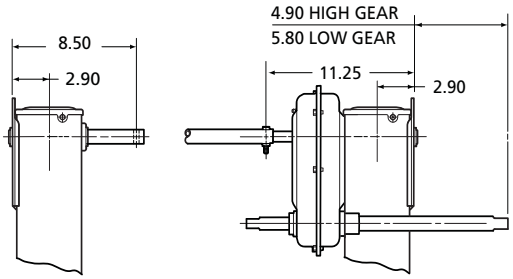

'C' Outboard Mounting

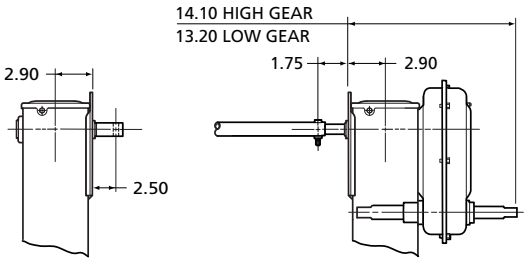

'D' I-Beam Mounting

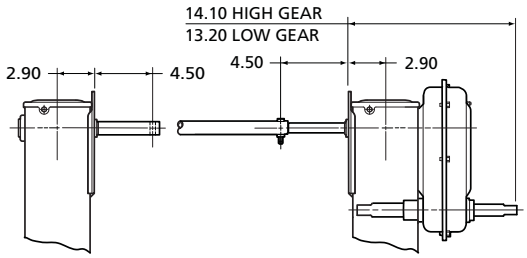

'F' Extended I-Beam Mounting

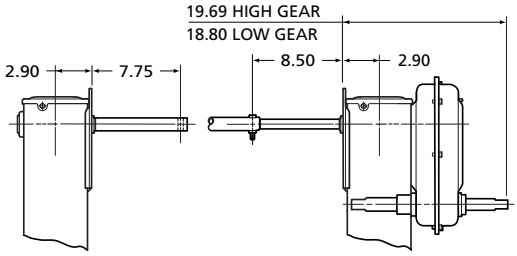

 Amendments and errors reserved. © SAF-HOLLAND, Inc.

HD Self-Leveling Foot

MODEL	"A"	"B"	"C"
LGH-1A012	27.9"	24.5"	13.5"
LGH-2A012	29.4"	26.0"	15.0"
LGH-3A012	30.9"	27.1"	16.5"
LGH-4A012	32.0"	28.2"	17.6"
LGH-5A012	33.2"	29.6"	18.7"

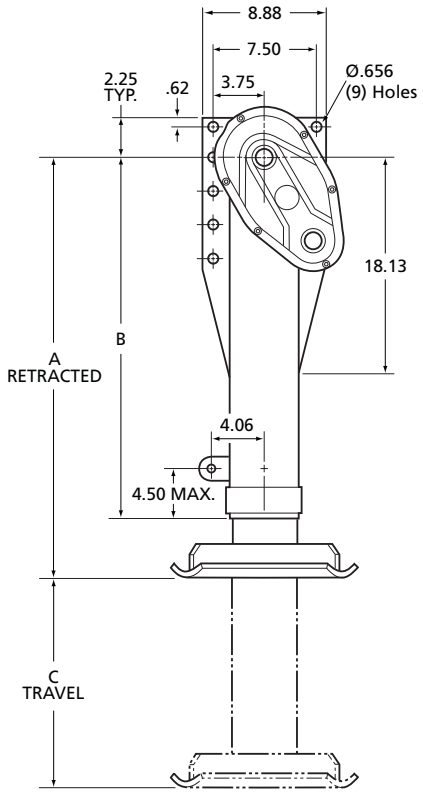

HD 12" x 17" Skid Foot

MODEL	"A"	"B"	"C"
LGH-1A312	29.7"	24.5"	12.0"
LGH-2A312	31.2"	26.0"	13.5"
LGH-3A312	32.3"	27.1"	15.4"
LGH-4A312	33.4"	28.2"	16.6"
LGH-5A312	34.8"	29.6"	17.4"

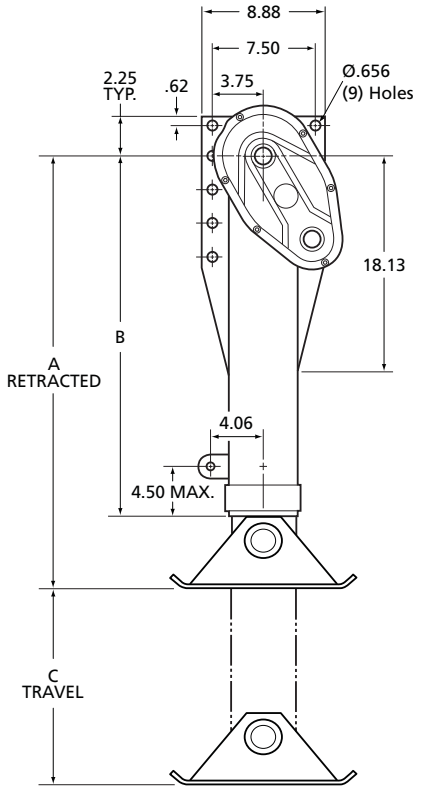

XL-LG11389PM-en-US Rev F 08-2014 Amendments and errors reserved. © SAF-HOLLAND, Inc.

CRANK S/A			
NO.	DESCRIPTION	NO.	DESCRIPTION
0	XA-V-90-0	8	XA-V-90-8
1	XA-V-90-1	9	XA-V-90-10
2	XA-V-90-2	A	XA-V-90-11
3	XA-V-90-3	B	XA-V-90-12
4	XA-V-90-4	C	XA-V-90-146
5	XA-V-90-5	H	XA-S0208
6	XA-V-90-6	Q	XA-V-90-13
7	XA-V-90-7	X	Delete

ACCESSORIES	
NO.	DESCRIPTION
0	Crank Holder & Brace Ears
1	Brace Ears Only
2	Crank Holder Only
X	Neither

GREASE / FITTINGS		
NO.	GREASE	FITTINGS
0	Standard	Standard
1	Low Temp	Standard
2	Standard	65°
3	Low Temp	65°
4	Standard	90°
5	Low Temp	90°
6	5 Yr. Warranty - No Maint.	
7	10 Yr. Warranty - No Maint.	

CROSS SHAFT LENGTH	
NO.	DESCRIPTION
0	Std. Length
# # 0	## + .00"
# # 5	## + ..50"
X	None

CAPACITY	
NO.	DESCRIPTION
S	Standard
H	Heavy Duty

SET LG X - X X X XX - X X X XXX

INDIV. LEG XA - X X - X

CAPACITY	
NO.	DESCRIPTION
S	Standard
H	Heavy Duty

LEG SPEED	
NO.	DESCRIPTION
8	Two-Speed
9	Single-Speed

GREASE / FITTINGS		
NO.	GREASE	FITTINGS
0	Standard	Standard
1	Low Temp	Standard
2	Standard	65°
3	Low Temp	65°
4	Standard	90°
5	Low Temp	90°
6	5 Yr. Warranty - No Maint.	
7	10 Yr. Warranty - No Maint.	

TRAVEL	
NO.	DISTANCE
0	12.5" *
1	13.5"
2	15.0"
3	16.5"
4	17.6"
5	18.7"
Z	Special

* 9.9" on skidfoot models
10.3" on RCF models

MOUNTING	
NO.	DESCRIPTION
A	Universal
B	Inside
C	Outside
D	I-Beam
F	Extended I-Beam
Z	Special

AXLE TYPE	
NO.	TYPE
0	No Axle
1	Standard
3	Solid Axle
Z	Special

FOOT TYPE					
NO.	FOOT TYPE	DESCRIPTION	NO.	FOOT TYPE	DESCRIPTION
01	Self-Leveling	DIA 12"	10	No Footware	---
02	Shock-Foot	DIA 10"	12	HD Self-Leveling	14"x 14"
03	Wheels	DIA 9"	13	Low Profile SF	2.0"x 12"x 11.5"
05	STD Skid Foot	4.5"x 12"x 11.5"	14	Cushion Foot	2.4"x 10"x 11.5"
06	Skid Foot	5.0"x 12"x 17"	15	Wt. Saver SF	3.8"x 10"x 11.5"
07	Skid Foot	5.0"x 12"x 23"	23	Low Pro. Wt. Svr.	2.0"x 10"x 11.5"
08	Big Skid Foot	5.0"x 14"x 19"	24	R.C.F.	2.9"x 11.4"x 11.4"
09	Wheels & SF	3.8"x 16"x 11.5"	ZZ	Special	

 Amendments and errors reserved. © SAF-HOLLAND, Inc.

Non-Spring Loaded Model
LGD700-212000000

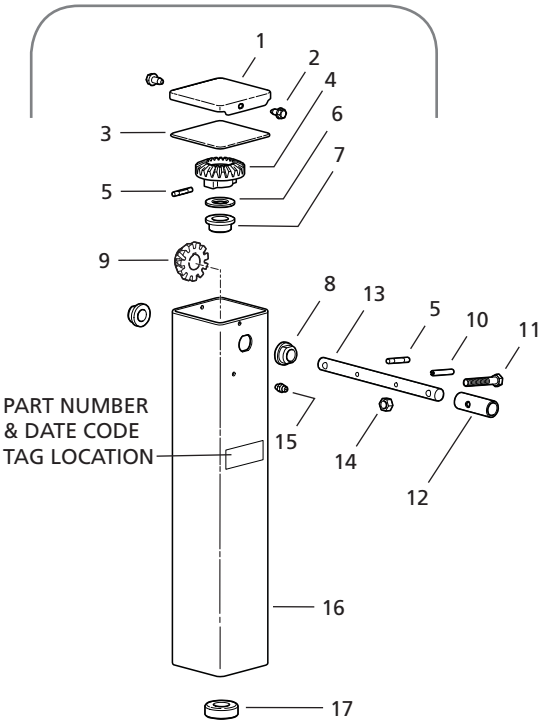

NO.	DESCRIPTION	PART NO.	QTY.
1	Top Cover	XA-LG0880	1
2	Self-Tapping Screw - .25"-20 x .50"	XB-STS-008-11	2
3	Cover Gasket	XB-LG0893	1
4	Bevel Gear	XB-LG2027	1
5	Groove Pin - .25" x 1.50" Type E	XB-GP-014-07	2
6	Washer - 1.02" ID x 1.75" OD x .13" Thk	XB-PW-016-51	1
7	Flange Bearing	XB-LG1460	1
8	Slip-Fit Bushing	LG2329	2
9	Pinion Gear	XB-LG2026	1
10	Spring Pin - .25" x 1.50"	XB-SP-014-27	1
11	Hex Head Screw - .38"-16 x 2.25" Grade 5	XB-HHC-050-42	1
12	Crank Adapter	XB-CP4651-16	1
13	Jack Shaft	LG2328	1
14	Self-Locking Nut - .38"-16 Grade B	XB-SLN-012-04	1
15	Grease Fitting - .25"-28	XB-GRF-022-16	1
16	Upper Housing	LG2392-03	1
17	Thrust Bearing	XB-BRG-013-70	1
18A	Tube Assy - Retracting & Screw	LG2032-01	1
18B	Tube Assy - Spring Loaded Retracting & Screw	LG2032	1
19	Self-Tapping Screw - .38"-16 x .44"	XB-STS-008-17	1
20A	Tube - Drop - Dual Pin	LG2003-01	1
20B	Tube - Drop - Dual Pin w/Spring	LG2003	1
21	Decal - Dual Pin	XB-DCL-031-60	1
22	Locking Pin	LG2024	2
23	Spring Handle	XB-LG2006	1
24	Tube Assy - Retracting & Screw - No Shoe	LG2033	1
25	Black Armour™ Touchup Paint (not shown)	RK-10919	1

Spring Loaded Model
LGD700-213000000

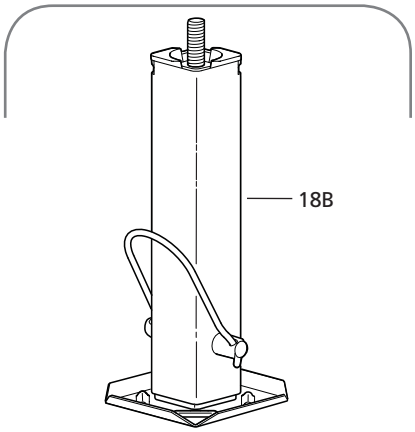

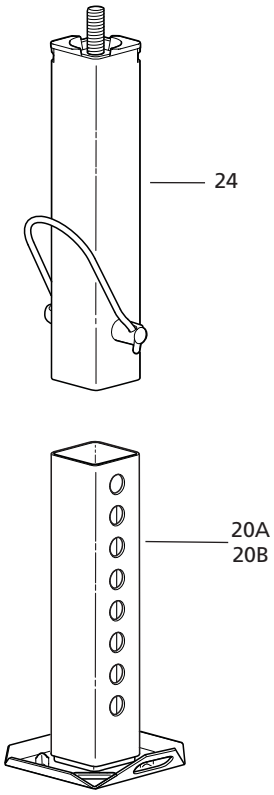

21. Decal
XB-DCL-031-60
(Supplied with Spring Loaded models only.)

DUAL PIN

⚠ CAUTION

U.S. PATENT NUMBER 5,423,518

SPRING LOADED DROP LEG

LOCKED POSITION — RELEASED POSITION

TO LOWER LEG:

1. Lower handle to released position with hand or foot.
2. Place foot on drop leg shoe and lower to desired extension.
3. Raise handle to locked position with hand or foot, then lift foot from shoe slowly. (Drop leg will automatically lock in next hole position.)
4. Rotate crank to extend leg until desired height is obtained.

TO RETRACT LEG:

1. Rotate crank to retract leg to minimum retracted position.
   ⚠ WARNING: Spring force can retract drop leg with impact. Keep hands and feet clear of impact area.
2. To raise drop leg, lower handle to released position with hand or foot. (Drop section will automatically retract.)
3. Raise handle to locked position with hand or foot.

DROP LEG (NO SPRING)

HANDLE FOR RAISING DROP LEG

TO LOWER LEG:

1. Lower handle to released position with hand or foot. (Drop leg will fall until contact with ground or extension stop.)
2. Raise handle to locked position with hand or foot. (Drop leg will automatically lock in nearest hole position.)
3. Rotate crank to extend leg until desired height is obtained.

TO RETRACT LEG:

1. Rotate crank to retract leg to minimum retracted position.
2. To raise drop leg, hold shoe handle while lowering leg handle to released position. Then lift shoe handle until drop leg is in full upward position.
3. Raise handle to locked position with hand or foot.

Holland

AS THE DUTCHMAN

Copyright © 2005 • The Holland Group, Inc.

XB-DCL-031-60 Rev. D XL-LG343-01

DIMENSIONS & CAPACITIES

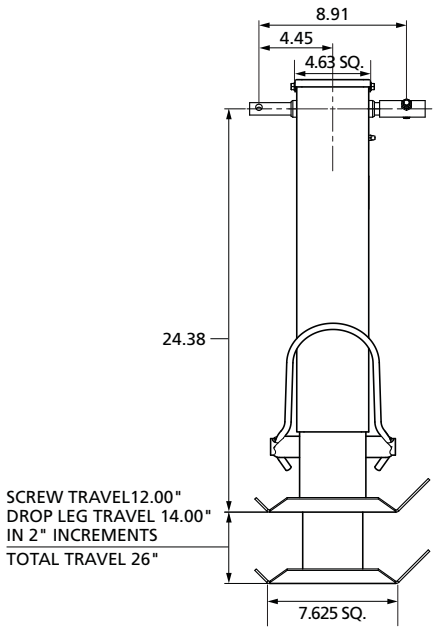

Lift Capacity: 12,500 lbs.
Rated Static Load Capacity: 20,000 lbs.
Weight: Approx. 40 lbs.

LANDING GEAR	
NO.	MODEL
LGD	Dual Pin

MOUNTING	
NO.	DESCRIPTION
7	Gooseneck

SHAFTS	
NO.	DESCRIPTION
0	Universal

FOOTWARE	
NO.	DESCRIPTION
0	No Footware

LGD 7 0 0 - 2 1 X 0 X X X X X

TRAVEL	
NO.	DESCRIPTION
2	12″

LEG ASSY	
NO.	DESCRIPTION
1	Left Hand

RETRACT TUBE	
NO.	DESCRIPTION
2	Dual Pin w/o Spring
3	Dual Pin Spring Loaded

GREASE	
NO.	DESCRIPTION
0	Standard Pack

LOG NO.	ACCESSORY NO.
Contact SAF-HOLLAND Customer Service for Special Options & Accessories	

 Amendments and errors reserved. © SAF-HOLLAND, Inc.

SAF-HOLLAND Group

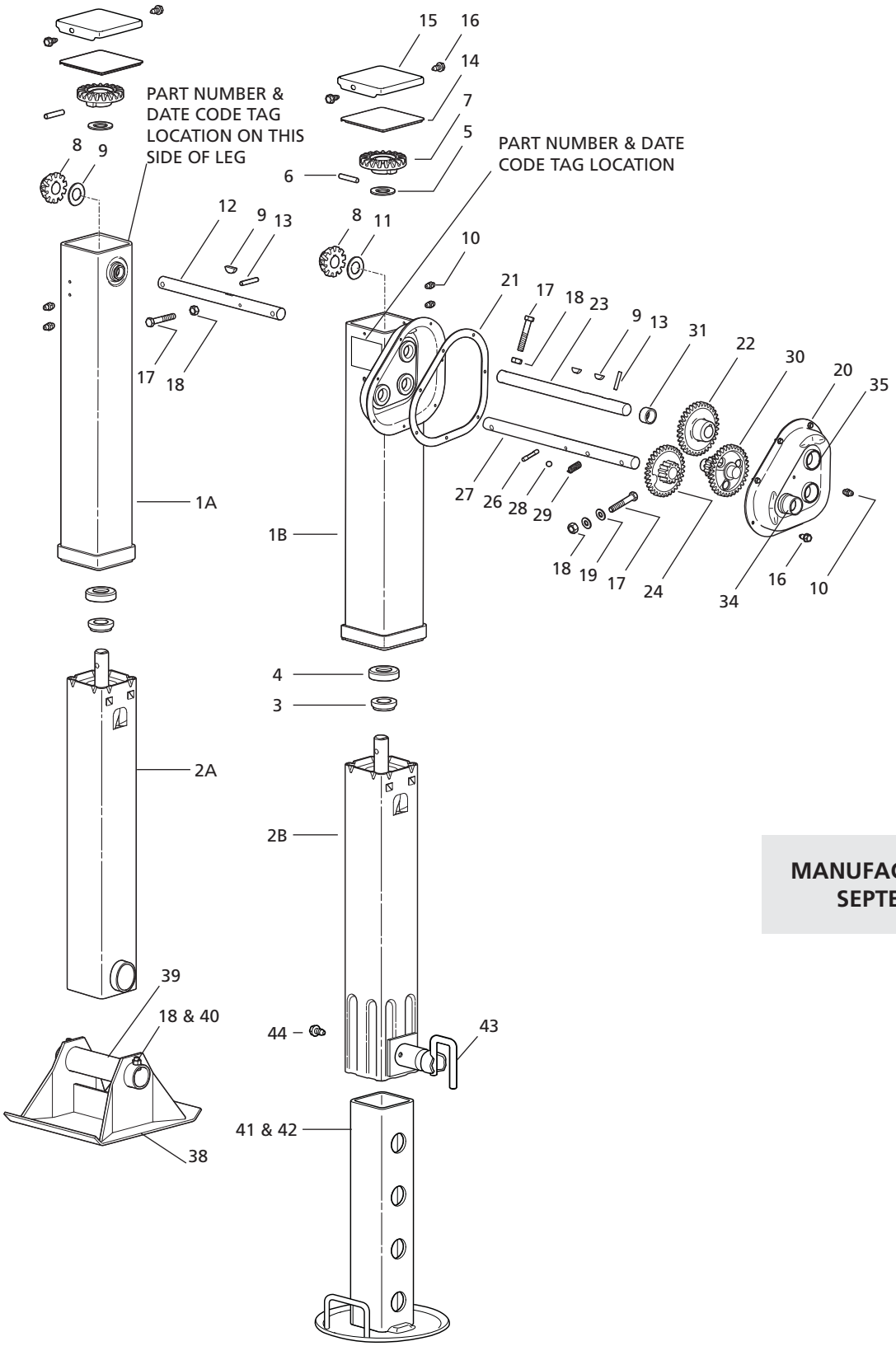

MANUFACTURED BEFORE SEPTEMBER 2010

XL-LG11389PM-en-US Rev F 08-2014 Amendments and errors reserved. © SAF-HOLLAND, Inc.

NO.	DESCRIPTION	PART NO.	SPEED	
			ONE	TWO
1A	Upper Housing LH	N/A	1	-
1B	Upper Housing RH	N/A	-	1
2A	Retract Tube - Axle	N/A	1	1
2B	Retract Tube - Dropleg	N/A	1	1
3	Collar	XB-LG0544	1	1
4	Thrust Bearing	XB-BRG-013-77	1	1
5	Washer - FL 2"OD x 1.19" ID x .13" THK	XB-PW-016-62	1	1
6	Pin - DIA .38"x 2"	XA-CRP-V-06635	1	1
7	Bevel Gear	XA-LG0570-01	1	1
8	Pinion Gear	XB-LG1823-01	1	1
9	Key - Woodruff .25" x .88"	XB-KEY-018-02	1	2
10	Ftg - Grease .25"-28 Self Tapping	XB-GRF-022-16	2	3
11	Washer - Fl 1.8"OD x 1.01"ID x .06" THK	XB-PW-016-19	1	1
12	Jack Shaft LH - Universal Mount	LG0927	1	-
	- Dropleg	LG0189-01	1	-
13	Pin - Spring DIA .25" x 1.5"	XB-SP-014-27	1	1
14	Gasket	XB-LG0893	1	1
15	Cover	XA-LG0880	1	1
16	Self-Tapping Screw .25"-20 x .5" Lg	XB-STS-008-11	2	9
17	Screw, Hex Cap .38"-16 x 2.25"Lg GR5	XB-HHC-050-42	1	2
18	Self-Locking Nut .38"-16	XB-SLN-012-04	2	3
19	Washer .38" Std Type A	XB-PW-016-03	-	2
20	Gearbox Half, - Outside w/Hole for Grease Fitting	LG0663	-	1
	- Outside w/Grease Fitting Included	XB-LG0663	-	1
21	Gearbox Gasket	XB-LG0428	-	1
22	Output Gear	LG0543-01	-	1
23	Jackshaft RH - Universal	LG0928	-	1
24	Input Gear	LG0541-01	-	1
26	Groove Pin, Type E DIA .25"x 1.50" Lg	XB-GP-014-07	-	1
27	Shift Shaft - Universal Mount	LG0261-01	-	1
28	Shift Lock Ball	XB-BAL-023-07	-	1
29	Shift Lock Spring	XB-SPG-020-36	-	1
30	Idler Gear	XB-LG0542-01	-	1
31	Spacer Bushing	XB-LG0219-01	-	1
32	Retainer, Hex Lock	LG2094	2	1
33	Hex Lock Boss	LG2095	2	1
34	Shift Lock Boss	XB-LG0658-01	-	1
35	Gearbox Boss	XB-LG0659-01	-	4
36	Gearbox Boss, Inside Half	XB-LG0660	-	1

NO.	DESCRIPTION	PART NO.	SPEED	
			ONE	TWO
38	Sandshoe - 10" x 10" x 4.50"	50616001	1	1
39	Sandshoe Axle - Hollow Axle 8.50" Lg	LG0070-02	1	1
40	Screw, Hex Cap .38"-16 x .75" Lg GR5	XB-HHC-050-69	1	1
41	Tube - Inner Telescoping Dropleg LH	LG0827-01	1	-
42	Tube - Inner Telescoping Dropleg RH	LG0827	-	1
43	Pull Pin	LG2314	1	1
44	Self-Tapping Screw - .38" - 16 x .44"	XB-STS-008-17	1	-
45	Black Armour™ Touchup Kit (not shown)	RK-10919	1	1

MANUFACTURED BEFORE SEPTEMBER 2010

For technical assistance please go to www.safholland.us or call 800.876.3929

 Amendments and errors reserved. © SAF-HOLLAND, Inc.

SAF-HOLLAND Group

MANUFACTURED AFTER SEPTEMBER 2010

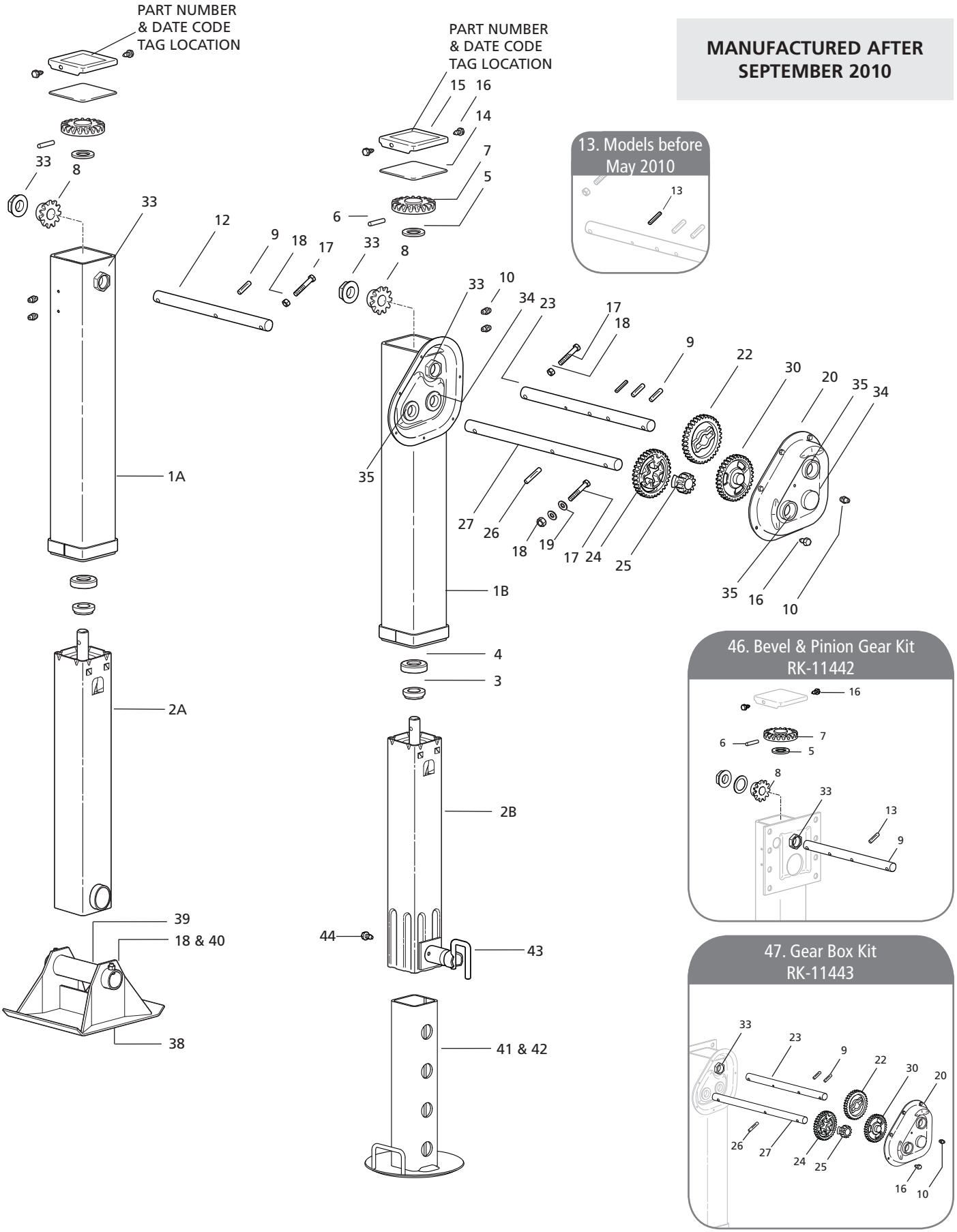

XL-LG11389PM-en-US Rev F 08-2014 Amendments and errors reserved. © SAF-HOLLAND, Inc.

MANUFACTURED AFTER SEPTEMBER 2010

NO.	DESCRIPTION	TRAVEL		
		13.50"	17"	19"
2A	Retract Tube - Axle	LG3012-01	LG3012-03	LG3012-04
2B	Retract Tube - Dropleg	LG3015-01	N/A	N/A

NO.	DESCRIPTION	PART NO.	SPEED	
			ONE	TWO
1A	Upper Housing LH	N/A	1	-
1B	Upper Housing RH	N/A	-	1
3	Collar	XB-LG0544	1	1
4	Thrust Bearing	XB-BRG-013-77	1	1
5	Washer - FL 2"OD x 1.19" ID x .13" THK	XB-PW-016-62	1	1
6	Pin - DIA .38"x 2"	XA-CRP-V-06635	1	1
7	Bevel Gear	LG2884	1	1
8	Pinion Gear	LG1823-02	1	1
9	Groove Pin - DIA .38" x 1.50"	XB-GP-014-18	1	2
10	Ftg - Grease .25"-28 Self Tapping	XB-GRF-022-16	2	3
12	Jack Shaft LH - Universal Mount	LG2964-01	1	-
	- Dropleg	LG2964-101	1	-
13	Pin - Spring DIA .25" x 1.5" (not required)	N/A	-	-
14	Cover Gasket	XB-LG0893	1	1
15	Top Cover	XA-LG0880	1	1
16	Self-Tapping Screw .25"-20 x .5" Lg	XB-STS-008-11	2	9
17	Screw, Hex Cap .38"-16 x 2.25"Lg GR5	XB-HHC-050-42	1	2
18	Self-Locking Nut .38"-16 - Sandshoe	XB-SLN-012-04	2	3
19	Washer .38" Std Type A	XB-PW-016-03	-	2
20	Gearbox Half, Outside w/Hole for Grease Fitting	LG2996	-	1
22	Output Gear	LG2980	-	1
23	Jackshaft RH - Universal Mount	LG2963-01	-	1
24	Input Gear - High	LG2968	-	1
25	Input Gear - Low	LG2969	-	1
26	Groove Pin, Type E DIA .38" x 2.00" Lg	XB-GP-052-21	-	1
27	Shift Shaft - Universal Mount	LG3011-01	-	1
30	Idler Gear	LG2975	-	1
33	Hex Lock Boss	LG2926	2	2
34	Output Shaft Bushing	LG3005	-	2
35	Boss Bearing - Sealed	LG0659-10	-	3

NO.	DESCRIPTION	PART NO.	SPEED	
			ONE	TWO
38	Sandshoe - 10" x 10" x 4.50"	50616001	1	1
	- 10" x 10" x 2.00"	50616008	1	1
39	Sandshoe Axle - Hollow Axle 8.50" Lg	LG0070-02	1	1
40	Screw, Hex Cap .38"-16 x .75" Lg GR5 - Sandshoe	XB-HHC-050-69	1	1
41	Tube - Inner Telescoping Drop Leg LH	LG0827-01	1	-
42	Tube - Inner Telescoping Drop Leg RH	LG0827	-	1
43	Pull Pin	LG2314	1	1
44	Self-Tapping Screw- .38" - 16 x .44"	XB-STS-008-17	1	1
46	Bevel & Pinion Gear Repair Kit	RK-11442	1	1
47	Gear Box Repair Kit	RK-11443	-	1
48	Black Armour™ Touchup Kit (not shown)	RK-10919	1	1

For technical assistance please go to www.safholland.us or call 800.876.3929

 Amendments and errors reserved. © SAF-HOLLAND, Inc.

SAF-HOLLAND Group

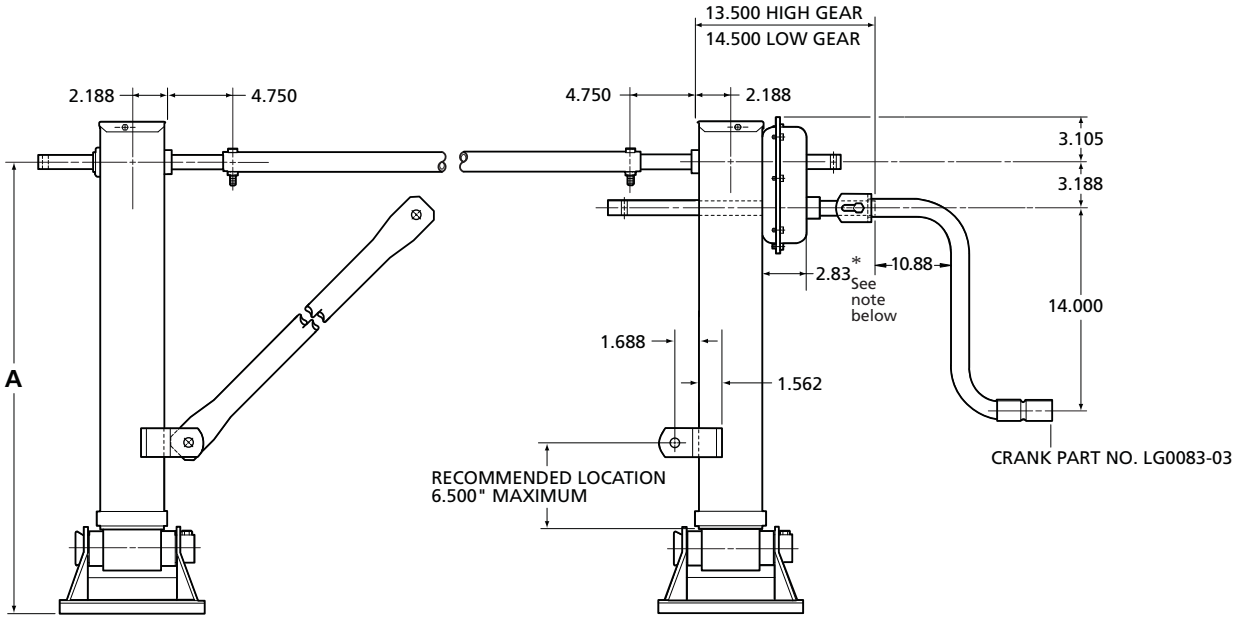

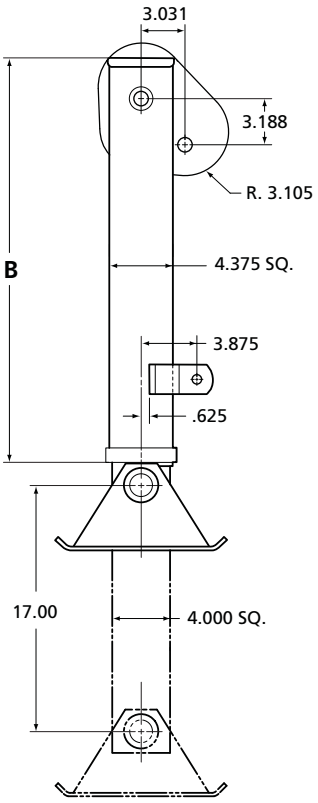

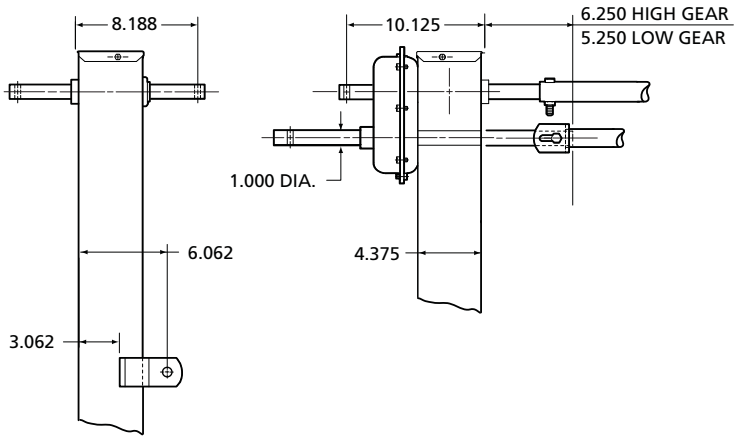

4700 & 4701 DIMENSIONS

TRAVEL	10x10x4.50 & 10x12x4.50 Sandshoe		10x10x2 & 10x12x2 Sandshoe		SHOCKFOOT		SHOCKFOOT SHOCK CAN		R.C.F. - STD		R.C.F - MRL		CRANK PART NO.	"C"
	"A"	"B"	"A"	"B"	"A"	"B"	"A"	"B"	"A"	"B"	"A"	"B"		
13.5"	28.69	25.56	26.19	25.56	29.00	28.56	N/A	N/A	27.25	25.56	27.25	25.56	LG0083-01	5.25
17"	31.19	28.06	28.69	28.06	31.75	30.06	28.75	28.06	31.75	30.06	29.75	28.06	LG0083-03	10.88
19"	33.69	30.06	31.19	30.06	31.75	30.06	N/A	N/A	32.38	30.06	N/A	N/A	LG0083-05	16.88

*Before September 2011 DIM was 3.91"

XL-LG11389PM-en-US Rev F 08-2014 Amendments and errors reserved. © SAF-HOLLAND, Inc.

LANDING GEAR	
NO.	MODEL
LG4	51000

MOUNTING	
NO.	DESCRIPTION
7	Gooseneck

SHAFTS	
NO.	DESCRIPTION
0	Universal

FOOTWARE	
NO.	DESCRIPTION
0	Fixed Shoe, Drop Leg Only
1	Sandshoe - 4.50” x 10” x 10”

LG4 7 0 X - X X X 0 XX XXX

TRAVEL	
NO.	DESCRIPTION
3	13.50”
7	17”
9	19”

LEG ASSY	
NO.	DESCRIPTION
0	Sets
1	Left Hand
2	Right Hand

RETRACT TUBE	
NO.	DESCRIPTION
0	Standard
4	51 Drop Leg

GREASE	
NO.	DESCRIPTION
0	Standard Pack

LOG NO.	ACCESSORY NO.
Contact SAF-HOLLAND Customer Service for Special Options & Accessories	

 Amendments and errors reserved. © SAF-HOLLAND, Inc.

SAF-HOLLAND Group

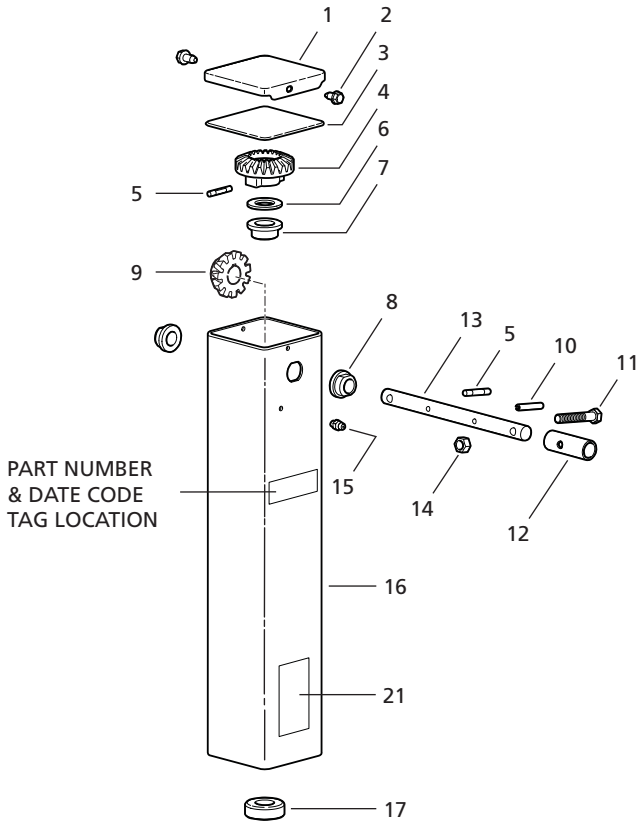

NO.	DESCRIPTION	PART NO.	QTY.
1	Top Cover	XA-LG0880	1
2	Self-Tapping Screw - .25"-20 x .50"	XB-STS-008-11	2
3	Cover Gasket	XB-LG0893	1
4	Bevel Gear	XB-LG2027	1
5	Groove Pin - .25" x 1.50" Type E	XB-GP-014-07	2
6	Washer - 1.02" ID x 1.75" OD x .13" Thk	XB-PW-016-51	1
7	Flange Bearing	XB-LG1460	1
8	Slip-Fit Bushing	LG2329	2
9	Pinion Gear	XB-LG2026	1
10	Spring Pin - .25" x 1.50"	XB-SP-014-27	1
11	Hex Head Screw - .38"-16 x 2.25" Grade 5	XB-HHC-50-42	1
12	Crank Adapter	XB-CP4651-16	1
13	Jack Shaft	LG2328	1
14	Self-Locking Nut - .38"-16 Grade B	XB-SLN-012-04	1
15	Grease Fitting - .25"-28	XB-GRF-022-16	1
16	Upper Housing	LG2392-01	1
17	Thrust Bearing	XB-BRG-013-70	1
18A	Tube Assy - Std. Retracting	LG1899	1
18B	Tube Assy- Cam-Lock Retracting Drop Leg	LG1721	1
19A	Tube - Inner Telescoping	LG1720-40	1
19B	Tube - Inner Telescoping	LG1720-10	1
20	Self-Tapping Screw - .38"-16 x .44"	XB-STS-008-17	1
21	Decal - Model 48000 Spring Loaded	XB-DCL-031-79	1
22	Extension Spring (Not Shown)	XB-SPG-020-26	1
23A	Pull Pin	LG0590	1
23B	Pull Pin	LG2314	1
24A	Tube Assy - Retract Screw - Cam-Lock	LG1723-02	1
24B	Tube Assy - Retract Screw - Spring Loaded	LG1723-01	1
25	Black Armour™ Touchup Paint (not shown)	RK-10919	1

Standard Model
LG8700-31000000
(Not Available as Assembly)

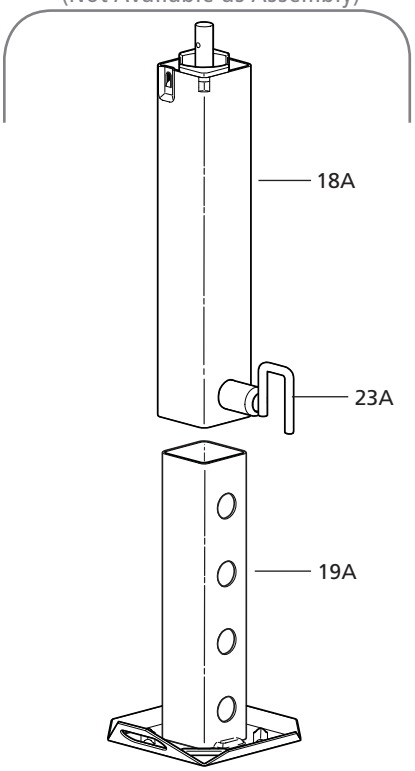

Cam Lock Model
LG8700-312000000
(Item Number 24A)

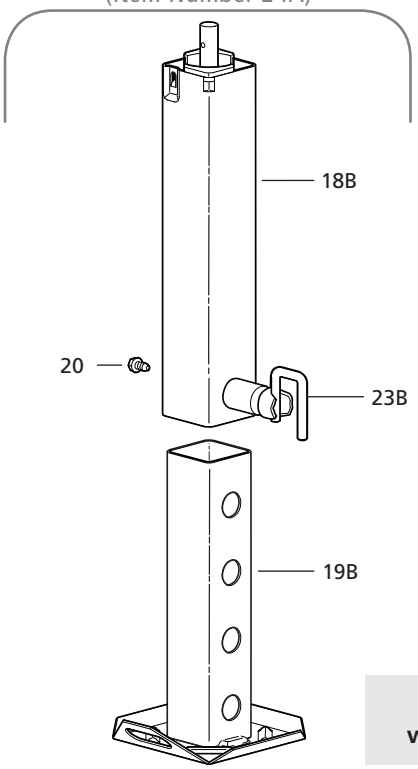

Spring Loaded Model
LG8700-313072000
(Item Number 24B)
Available as Assembly Only.

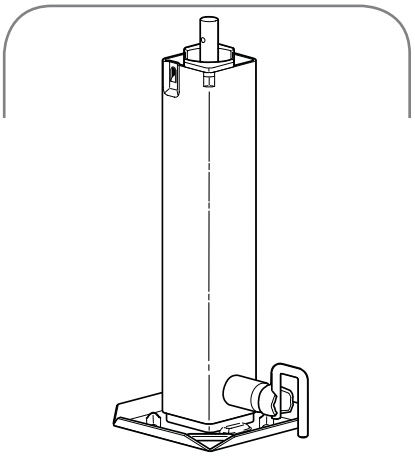

MODEL NO.	APPROXIMATE WEIGHT
LG8700-31000000	41.20 lbs. w/o Accessories
LG8700-31200000	51.42 lbs. w/o Accessories
LG8700-31300000	44.53 lbs. w/o Accessories

For technical assistance please go to www.safholland.us or call 800.876.3929

XL-LG11389PM-en-US Rev F 08-2014 Amendments and errors reserved. © SAF-HOLLAND, Inc.

21. Decal
XB-DCL-031-79
(Supplied with Spring Loaded models only.)

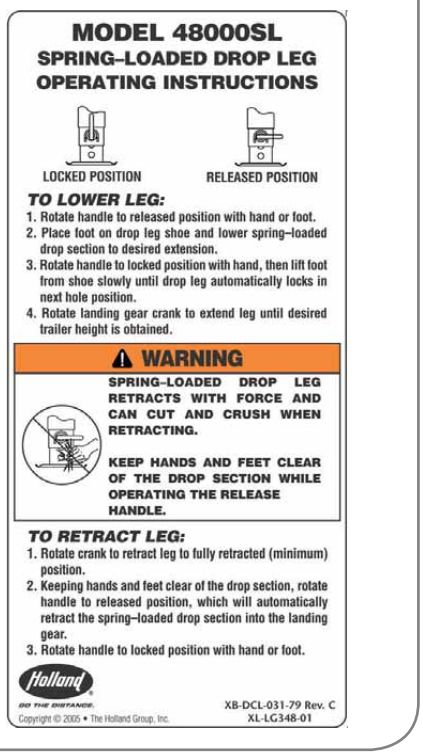

MODEL 48000SL
SPRING–LOADED DROP LEG OPERATING INSTRUCTIONS

LOCKED POSITION — RELEASED POSITION

TO LOWER LEG:
1. Rotate handle to released position with hand or foot.
2. Place foot on drop leg shoe and lower spring–loaded drop section to desired extension.
3. Rotate handle to locked position with hand, then lift foot from shoe slowly until drop leg automatically locks in next hole position.
4. Rotate landing gear crank to extend leg until desired trailer height is obtained.

WARNING

SPRING–LOADED DROP LEG RETRACTS WITH FORCE AND CAN CUT AND CRUSH WHEN RETRACTING.

KEEP HANDS AND FEET CLEAR OF THE DROP SECTION WHILE OPERATING THE RELEASE HANDLE.

TO RETRACT LEG:
1. Rotate crank to retract leg to fully retracted (minimum) position.
2. Keeping hands and feet clear of the drop section, rotate handle to released position, which will automatically retract the spring–loaded drop section into the landing gear.
3. Rotate handle to locked position with hand or foot.

Holland — DO THE DIFFERENCE.
Copyright © 2005 • The Holland Group, Inc.
XB-DCL-031-79 Rev. C
XL-LG348-01

DIMENSIONS & CAPACITIES

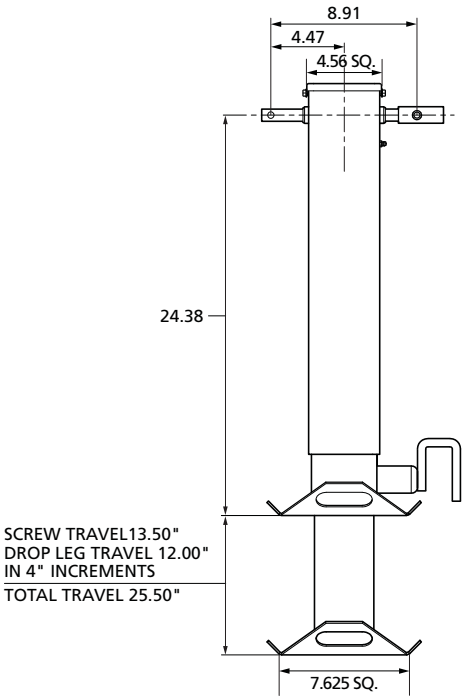

Lift Capacity: 10,000 lbs.
Rated Static Load Capacity: 12,000 lbs.
Weight: Approximately 50 lbs.

LANDING GEAR	
NO.	MODEL
LG8	48,000

MOUNTING	
NO.	DESCRIPTION
7	Gooseneck

SHAFTS	
NO.	DESCRIPTION
0	Universal

FOOTWARE	
NO.	DESCRIPTION
0	Std. - No Footware

LG8 7 0 0 - 3 1 X 0 XX XXX

TRAVEL	
NO.	DESCRIPTION
3	13.50"

LEG ASSY	
NO.	DESCRIPTION
1	Left Hand

RETRACT TUBE	
NO.	DESCRIPTION
0	Standard
2	48000 Cam-Lock
3	48000 Spring Loaded

GREASE	
NO.	DESCRIPTION
0	Standard Pack

LOG NO.	ACCESSORY NO.
Contact SAF-HOLLAND Customer Service for Special Options & Accessories	

LG9700-71000000

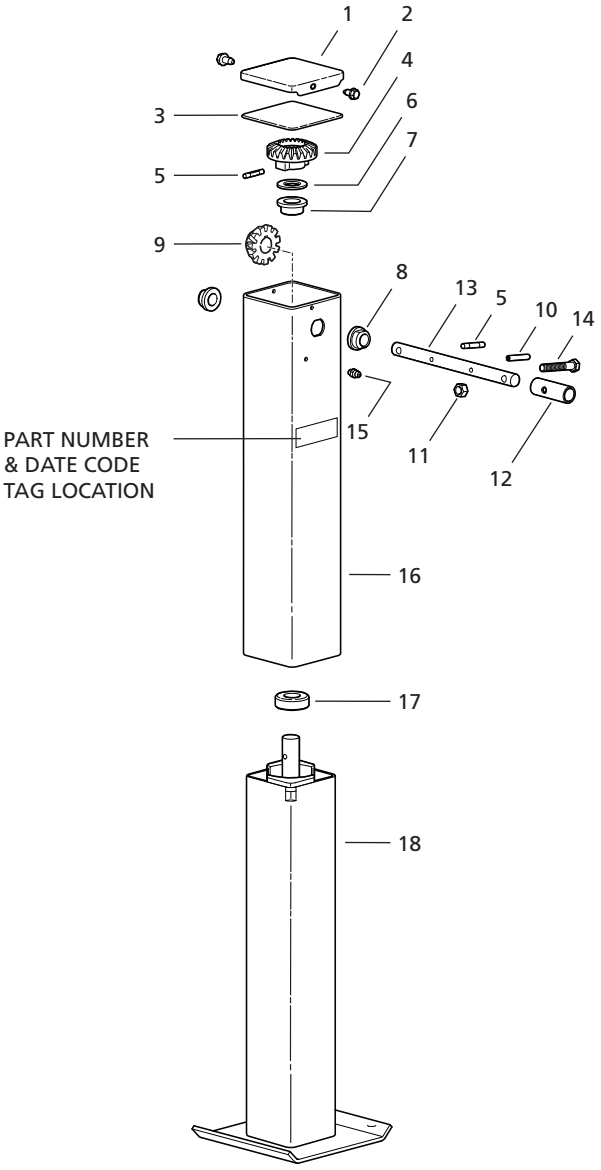

NO.	DESCRIPTION	PART NO.	QTY.
1	Top Cover	XA-LG0880	1
2	Self-Tapping Screw - .25”-20 x .50”	XB-STS-008-11	2
3	Cover Gasket	XB-LG0893	1
4	Bevel Gear	XB-LG2027	1
5	Groove Pin - .25” x 1.50” Type E	XB-GP-014-07	2
6	Washer - 1.02 ID x 1.75 OD x .13 THK	XB-PW-016-51	1
7	Flange Bearing	XB-LG1460	1
8	Slip-Fit Bushing	LG2329	2
9	Pinion Gear	XB-LG2026	1
10	Spring Pin - .25” x 1.50”	XB-SP-014-27	1
11	Self-Locking Nut - .38”-16 Grade B	XB-SLN-012-04	1
12	Crank Adapter	XB-CP4651-16	1
13	Jack Shaft	LG2328	1
14	Hex Head Screw - .38”-16 x 2.25” Grade 5	XB-HHC-50-42	1
15	Grease Fitting - .25”-28	XB-GRF-022-16	1
16	Upper Housing	LG2392-02	1
17	Thrust Bearing	XB-BRG-013-70	1
18	Tube Assy - Retracting & Screw - 49000	LG1468	1
19	Black Armour™ Touchup Paint (not shown)	RK-10919	1

For technical assistance please go to www.safholland.us or call 800.876.3929

XL-LG11389PM-en-US Rev F 08-2014 Amendments and errors reserved. © SAF-HOLLAND, Inc.

DIMENSIONS & CAPACITIES

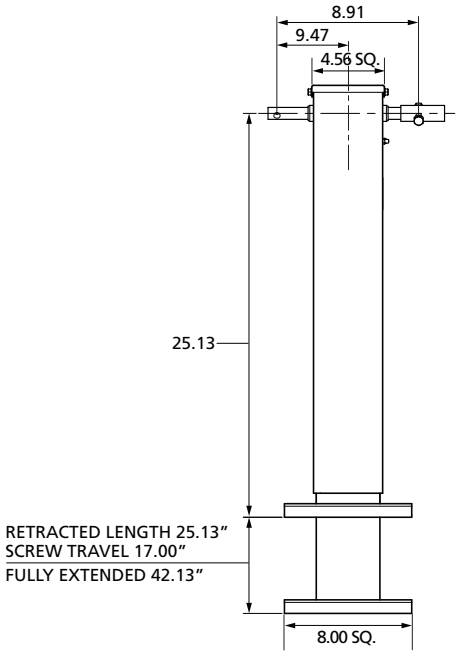

Lift Capacity: 10,000 lbs.
Rated Static Load Capacity: 15,000 lbs.
Weight: Approximately 36 lbs.

LANDING GEAR	
NO.	MODEL
LG9	49000

MOUNTING	
NO.	DESCRIPTION
7	Gooseneck

SHAFTS	
NO.	DESCRIPTION
0	Universal

FOOTWARE	
NO.	DESCRIPTION
0	Std. - No Footware

LG9 7 0 0 - 7 1 0 0 X X X X X

TRAVEL	
NO.	DESCRIPTION
7	17"

LEG ASSY	
NO.	DESCRIPTION
1	Left Hand

RETRACT TUBE	
NO.	DESCRIPTION
0	Standard

GREASE	
NO.	DESCRIPTION
0	Standard Pack

LOG NO.	ACCESSORY NO.
Contact SAF-HOLLAND Customer Service for Special Options & Accessories	

 Amendments and errors reserved. © SAF-HOLLAND, Inc.

SAF-HOLLAND Group

NO.	DESCRIPTION	PART NO.	QTY.
1	Upper Housing	LG1871	1
2A	Lockpin Assembly	LG1877	1
2B	Lockpin Assembly w/o Chain	XB-CP4647-10	1
3A	Inner Tube - Welded Shoe	SEE CHART	1
3B	Inner Tube - Removable Shoe	SEE CHART	1
4	Removable Shoe	LG0177	1
5	Hex Head Screw - .50"-13 x 3.50"	XB-HHC-001-40	1
6	Self-Locking Nut - .50"-13	XB-SLN-012-07	1
7	Decal - Operating Instructions	XB-DCL-031-66	1

For technical assistance please go to www.safholland.us or call 800.876.3929

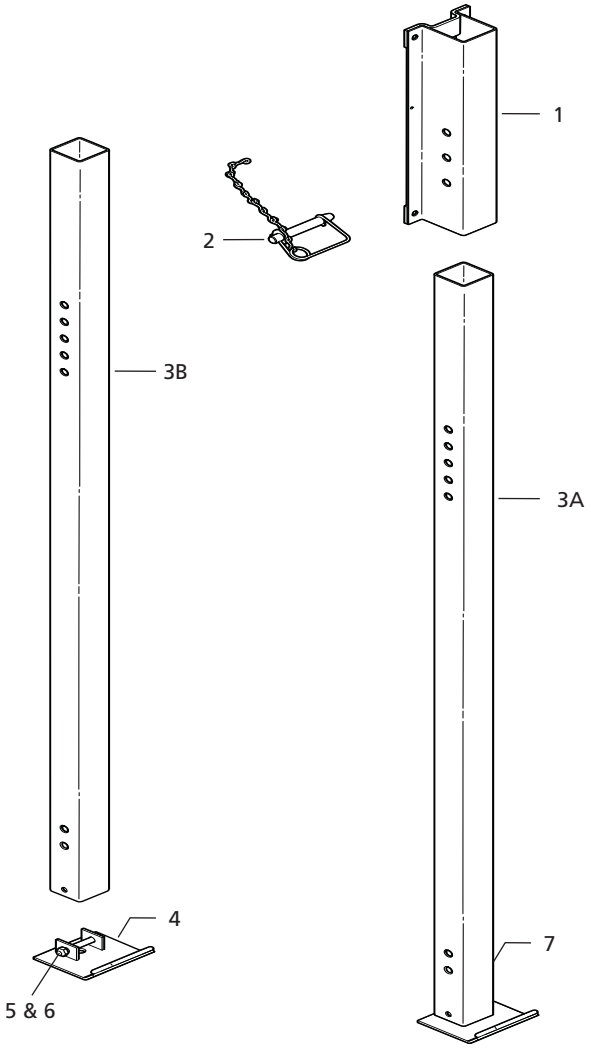

7. Decal
XB-DCL-031-66

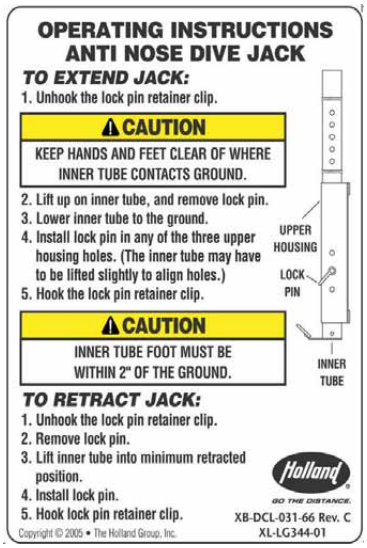

OPERATING INSTRUCTIONS
ANTI NOSE DIVE JACK

TO EXTEND JACK:

1. Unhook the lock pin retainer clip.

⚠ CAUTION
KEEP HANDS AND FEET CLEAR OF WHERE INNER TUBE CONTACTS GROUND.

2. Lift up on inner tube, and remove lock pin.
3. Lower inner tube to the ground.
4. Install lock pin in any of the three upper housing holes. (The inner tube may have to be lifted slightly to align holes.)
5. Hook the lock pin retainer clip.

⚠ CAUTION
INNER TUBE FOOT MUST BE WITHIN 2" OF THE GROUND.

UPPER HOUSING
LOCK PIN
INNER TUBE

TO RETRACT JACK:

1. Unhook the lock pin retainer clip.
2. Remove lock pin.
3. Lift inner tube into minimum retracted position.
4. Install lock pin.
5. Hook lock pin retainer clip.

Holland GO THE DISTANCE.
XB-DCL-031-66 Rev. C
XL-LG344-01

Copyright © 2005 • The Holland Group, Inc.

 Amendments and errors reserved. © SAF-HOLLAND, Inc.

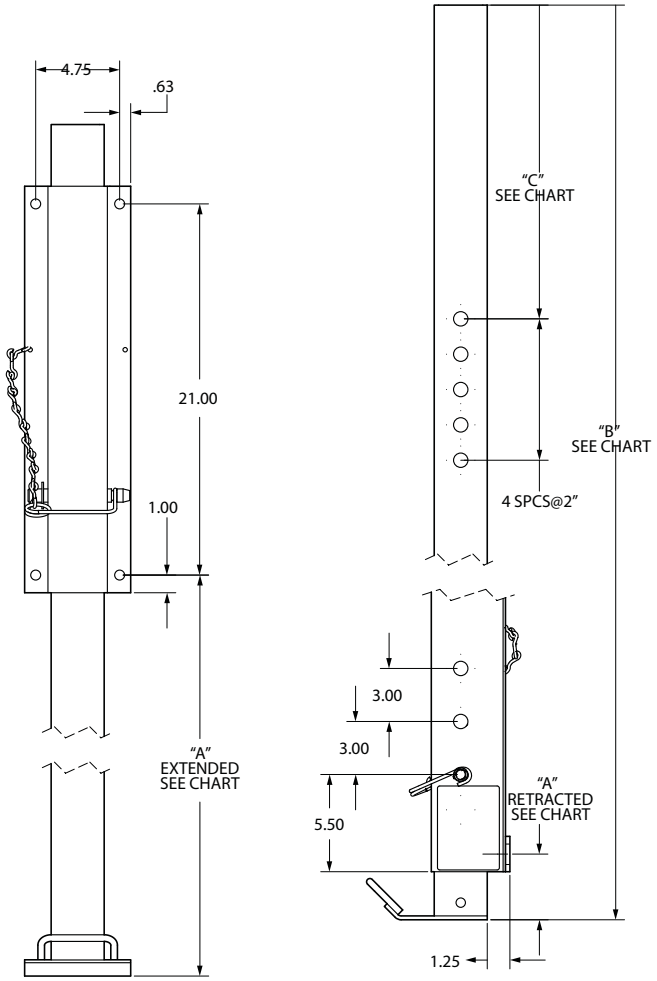

Vertical Load Rating: 10,000 lbs.

ANTI-NOSE DIVE DIMENSIONS

NO.	PART NO.	DESCRIPTION	DIMENSION "A" LENGTH		TOTAL LENGTH "B"	TOP PIN HOLE "C"	INNER TUBE PART NO.	WT. (LBS)
			Retracted (2 positions)	Extended in 1" Increments				
3A	LG1870	Shipped fully assembled, welded shoe	1.75-3.75	52.25-66.25	88.50	17.75	LG1872	86.30
	LG1870-01	Shipped disassembled, welded shoe	1.75-3.75	52.25-66.25	88.50	17.75	LG1872	86.40
	LG1870-07	Shipped disassembled, welded shoe	1.75-3.75	42.25-56.25	78.50	17.75	LG1872-03	55.80
3B	LG1870-02	Shipped fully assembled, removable shoe	1.75-3.75	52.25-66.25	88.66	17.75	LG1874-01	87.00
	LG1870-04	Shipped fully assembled, removable shoe & drop out stop	1.75-3.75	52.25-66.25	88.66	17.94	LG1879	52.50
	LG1870-05	Shipped fully assembled, removable shoe	1.75-3.75	42.25-56.25	78.50	17.75	LG1874-03	21.40

SAF-HOLLAND Group

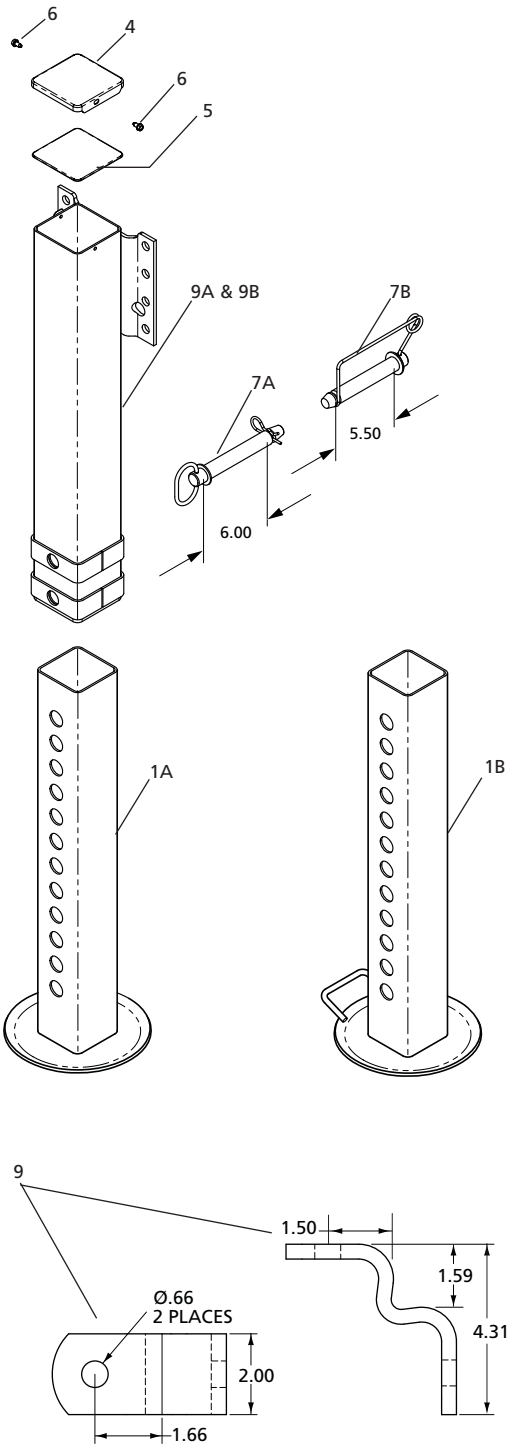

NO.	DESCRIPTION	PART NO.	QTY.
1A	Drop Tube Assy	LG2151	1
1B	Drop Tube Assy w/Handle	LG2151-101	1
3	Drop Leg Housing Assy	N/A	1
4	Top Cover	XA-LG0880	1
5	Cover Gasket	XB-LG0893	1
6	Self-Tapping Screw .25"-20 x .50"	XB-STS-008-11	2
7A	Hitch Pin (Standard)	XB-HTP-014-69	1
7B	Snap-Lock Pin (Optional)	XB-LKP-014-100	1
8	Upper Housing Assy - w/Mounting Bracket	LG2153	1
8	Upper Housing Assy - w/out Mounting Bracket	LG2153-102	1
9	Strut Bracket (shipped loose)	LG0266	1

PART NO.	DIMENSION "A"			WEIGHT (LBS)
	EXTENDED LENGTH IN 1" INCREMENTS	RETRACTED LENGTH	TOTAL TRAVEL	
JS150-SB*	54.70	29.70	25.00	47.10
JS150-SB-102*	51.70	26.70	25.00	44.80
JS150-SB-101*	55.58	30.58	25.00	47.30

*Can add - NB to the end of part number for No Brackets (LG0266). LG0266 Strut Bracket included but not shown. See Accessories Catalog No. XL-AM10013PM for bracket information.

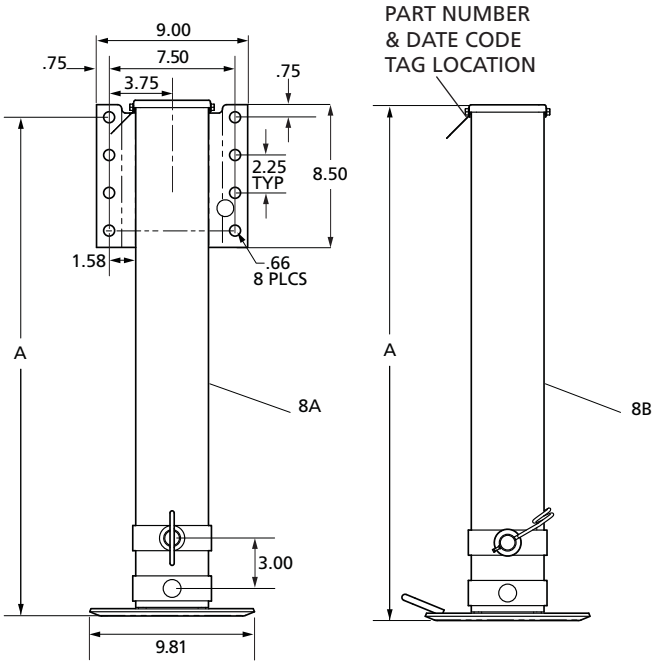

For technical assistance please go to www.safholland.us or call 800.876.3929

Standard Vertical Load Capacity: 30,000 lbs.

XL-LG11389PM-en-US Rev F 08-2014 Amendments and errors reserved. © SAF-HOLLAND, Inc.

NO.	DESCRIPTION	PART NO.	QTY.
1	Lift Assembly	XA-V-77070	1
2	Upper Tube Assembly	XA-V-77071	1
3	Inner Leg & Screw Assembly	XA-V-07957	1
4	Bevel Gear	XA-V-06601	1
5	Washer 1.26" ID x 2.25" OD	XB-V-06632	1
6	Pin, .38" x 2"	XA-CRP-V-06635	1
7	Retainer	XB-LG1570	2
8	Double Step Bearing	XB-LG0559	2
9	Bevel Pinion Gear	XA-V-06600	1
10	Grooved Pin .38" x 1.50"	XB-GP-38-1-12-E	1
11	Screw Bushing	XB-V-06630	1
12	Thrust Bearing	XB-V-647	1
13	Collar	XB-V-06629	1
14	Wheel S/A, Heavy Duty	XB-V-747-HD-1	2
15	Spring Pin	XB-21-S-375-3000	2
16	Spacer	XA-02154	2
17	Axle	XA-V-1875-10	1
18	Gear Shaft Assembly	XA-V-07954	1
19	HHCS .38"-16 x 1.13" Plated	XB-C-375-C-125	4
20	Nut Lock .38"-16	XB-338	4
21	Lube Fitting	XB-767	1
22	Lube Fitting w/Extension Tube	XB-767-L	1

For technical assistance please go to www.safholland.us or call 800.876.3929

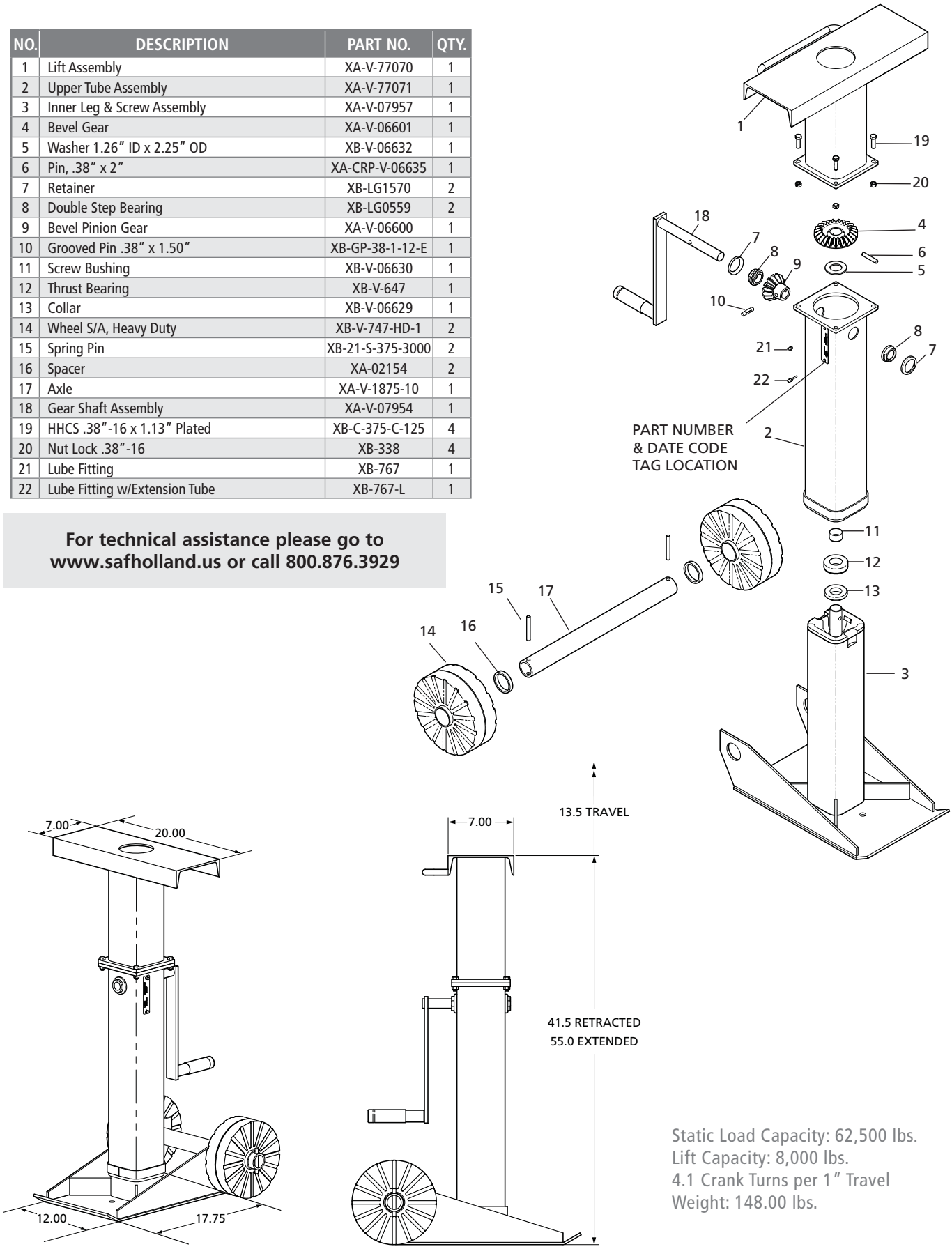

Static Load Capacity: 62,500 lbs.
Lift Capacity: 8,000 lbs.
4.1 Crank Turns per 1" Travel
Weight: 148.00 lbs.

 Amendments and errors reserved. © SAF-HOLLAND, Inc.

SAF-HOLLAND Group

NO.	DESCRIPTION	PART NO.	QTY.
1	Selftap Screw - .38" - 16 x .44" Hex Head	XB-STS-008-17	1
2	Self locking Nut - .38" - 16 Grade B	XB-SLN-012-04	1
3	Grease Fitting - .25" - 28 Straight	XB-GRF-022-16	3
4	Punchout Slot, Retract Tube	LG1973-50	1
5	Dowel Pin 38" x 1" Std Series	LG2596	1
6	Crank Assy	XA-V-298-01	1
7	Leg Assy - Upper	LG2601	1
8A	Leg Assy - Lower	LG2602	1
8B	- Lower	LG2955	1
9	Thrust Bearing	XB-BRG-013-70	1
10	Washer 1.50" OD x .94" ID x .06"	XB-PW-016-88	1
11	Grooved Pin	XB-GP-014-07	1
12	Plain Washer .41" ID x .81" OD x .06"	XB-PW-016-03	2
13	HD Hex Screw, .38" - 16 x 2.25"	XB-HHC-050-42	1
14A	Swivel Caster - 800 lb Capacity	XB-03695	1
14B	1200 lb Capacity	XB-03857	1
14C	600 lb Capacity	XB-03858	1
14D	Caster Assembly - 1200 lb. Capacity	LG2605	1
14E	Caster Assembly - 500 lb. Capacity	LG2954	1

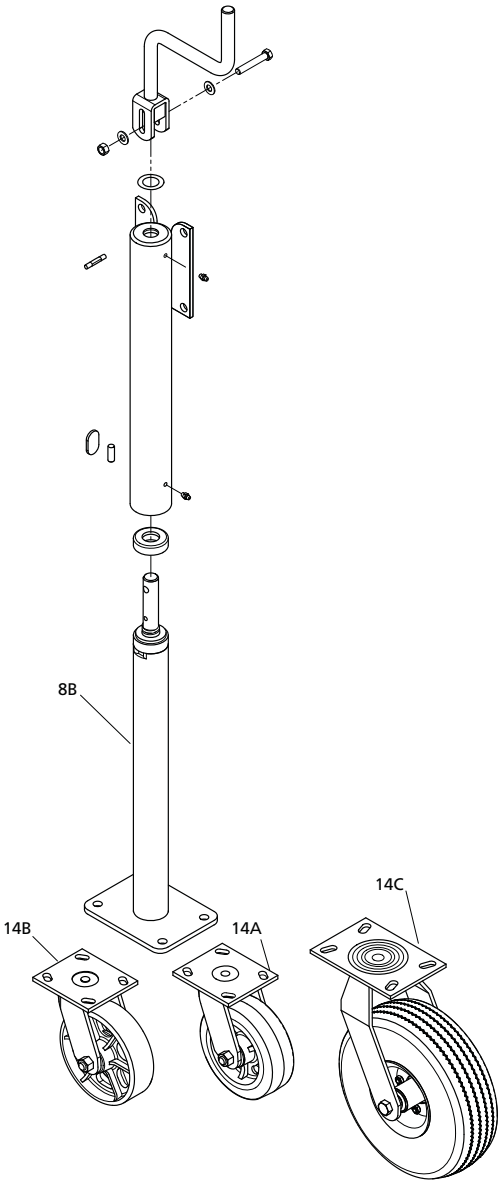

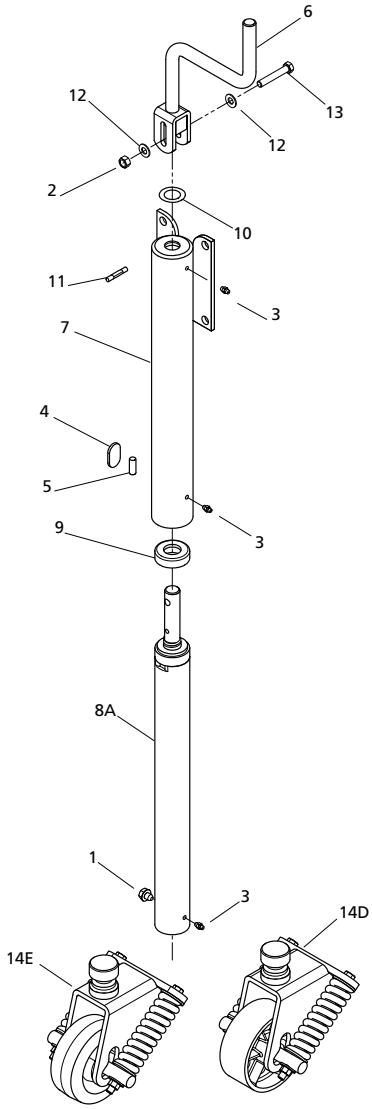

XL-LG11389PM-en-US Rev F 08-2014 Amendments and errors reserved. © SAF-HOLLAND, Inc.

STANDARD MODEL	RETRACTED LENGTH	FOOTWARE	STATIC LOAD CAPACITY*	WT (LBS)
JS-300-J8	23.4″	None	-	23 lbs.
JS-300-J	30.3″	5″ x 2″ Steel	1200 lbs.	36 lbs.
JS-300-JR	30.3″	5″ x 2″ Plastic	500 lbs.	34 lbs.
JS-300-B	23.7″	None	-	25 lbs.
JS-300-B6R	31.4″	6″ x 2″ Mold-on Rubber	800 lbs.	35 lbs.
JS-300-B6S	31.4″	6″ x 2″ Cast Steel	1200 lbs.	37 lbs.
JS-300-B10P	36.2″	10″ x 3″ 4-Ply Pneumatic	600 lbs.	41 lbs.

* Actual capacity is determined by caster.
NOTE: Bracing is not included. SAF-HOLLAND recommends that adequate bracing of dolly jacks to dolly frames be used in order to ensure structural rigidity.

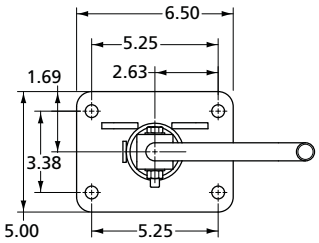

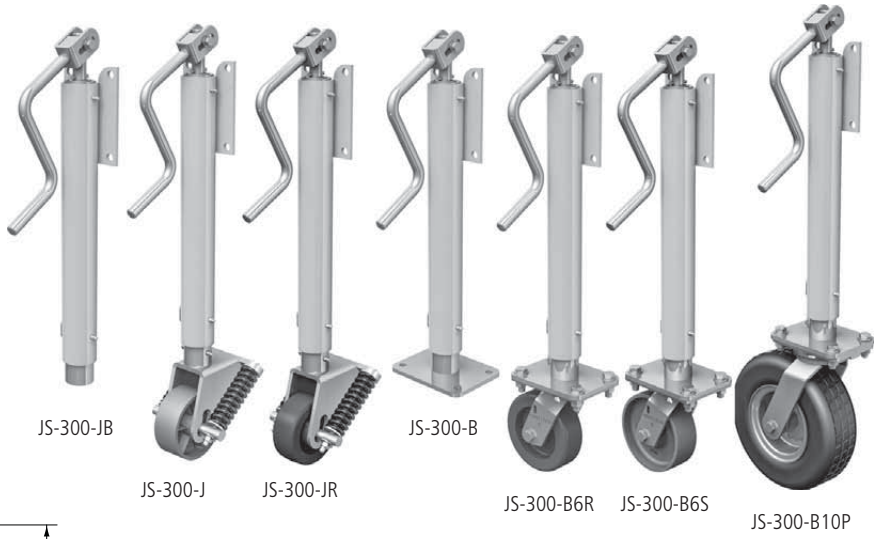

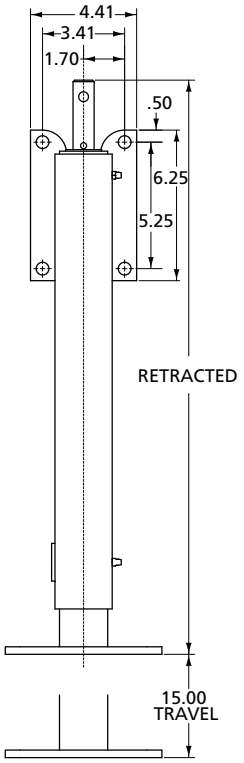

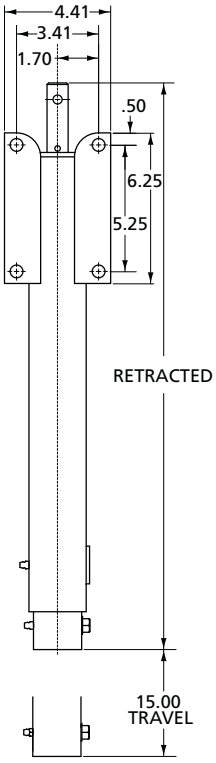

For technical assistance please go to www.safholland.us or call 800.876.3929

 Amendments and errors reserved. © SAF-HOLLAND, Inc.

Jack Shafts - Left Hand Universal

51000 & 51000 NoLube™ (LG4), Fast Gear & Fast Gear NoLube™ (FG4),

FOR MODELS BEFORE SEPTEMBER 2010

4700 & 4701 Series (LG47)

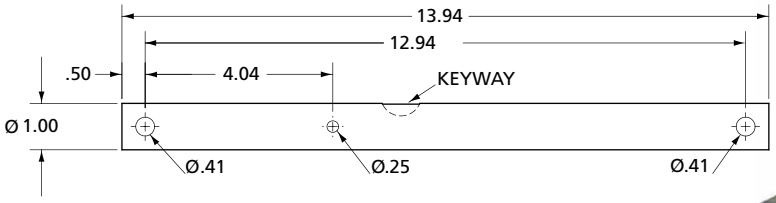

PART NO.	WEIGHT (lbs)
LG0927	2.99

ATLAS 55 & ATLAS 55 NoLube™ (LG4),

FOR MODELS AFTER SEPTEMBER 2010

4700 & 4701 Series (LG47)

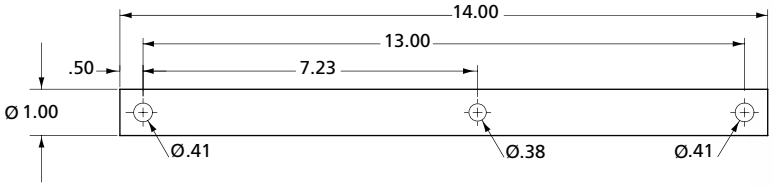

PART NO.	WEIGHT (lbs)
LG2964-01	3.00

Atlas 65 & Atlas 65 NoLube (Version 1)

FOR MODELS BEFORE JANUARY 2013

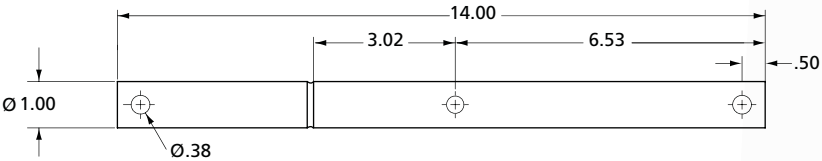

PART NO.	WEIGHT (lbs)
2111100000430	3.00

Atlas 65 & Atlas 65 NoLube (Version 2)

FOR MODELS AFTER JANUARY 2013

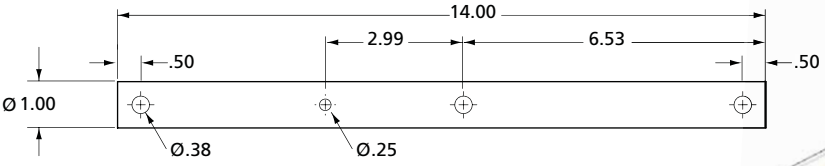

PART NO.	WEIGHT (lbs)
2111100000431	2.99

XL-LG11389PM-en-US Rev F 08-2014 Amendments and errors reserved. © SAF-HOLLAND, Inc.

Jack Shafts - Left Hand Universal

50000 & 50000 NoLube™ (LG5)

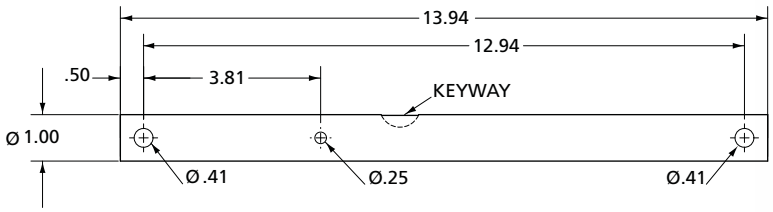

PART NO.	WEIGHT (lbs)
LG0259	2.99

CMS2 & CMS3

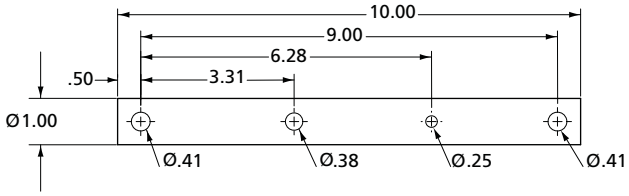

PART NO.	WEIGHT (lbs)
750004	2.99

CLASSIC (LG2T)

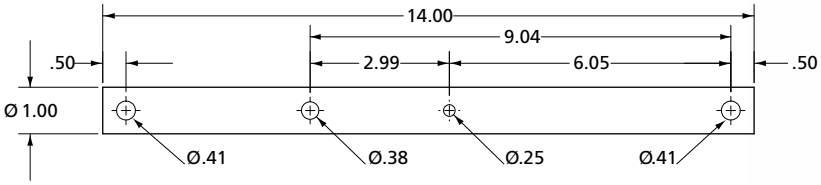

PART NO.	WEIGHT (lbs)
LG-750004-01	2.99

MARK V & MARK V Heavy Duty

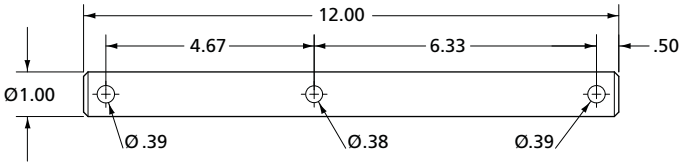

PART NO.	WEIGHT (lbs)
XA-V-06623-A	2.57

 Amendments and errors reserved. © SAF-HOLLAND, Inc.

SAF-HOLLAND Group

Jack Shafts - Left Hand Universal

Dual-Pin Drop Leg (LGD700), 48000 Series (LG87), 4900 Series (LG97)

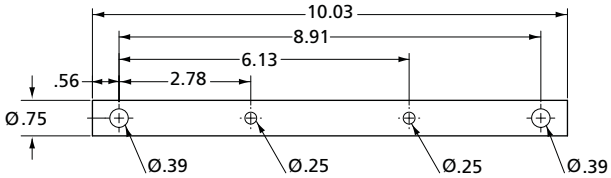

PART NO.	WEIGHT (lbs)
LG2328	1.19

Jack Shafts - Left Hand I-Beam

51000 & 51000 NoLube™ (LG4), Fast Gear & Fast Gear NoLube™ (FG4)

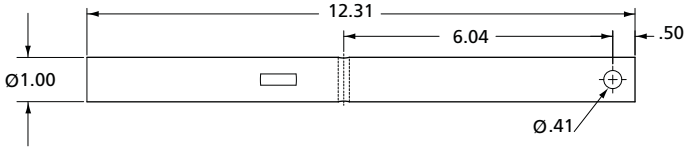

PART NO.	WEIGHT (lbs)
LG0946	2.67

ATLAS 55 & ATLAS 55 NoLube™ (LG4)

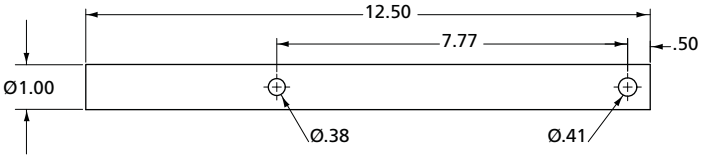

PART NO.	WEIGHT (lbs)
LG2964-04	2.69

XL-LG11389PM-en-US Rev F 08-2014 Amendments and errors reserved. © SAF-HOLLAND, Inc.

Jack Shafts - Left Hand I-Beam

Atlas 65 & Atlas 65 NoLube (Version 1)

FOR MODELS BEFORE SEPTEMBER 2010

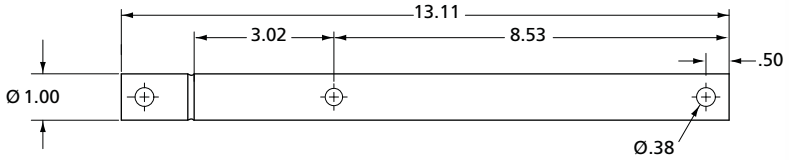

PART NO.	WEIGHT (lbs)
2111100000460	2.83

Atlas 65 & Atlas 65 NoLube (Version 2)

FOR MODELS AFTER SEPTEMBER 2010

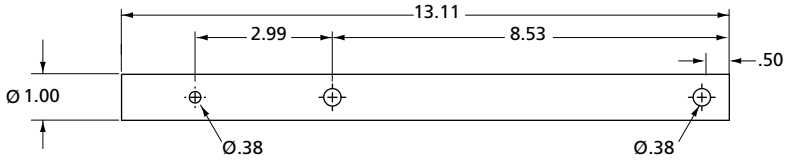

PART NO.	WEIGHT (lbs)
2111100000461	2.83

Atlas 65 & Atlas 65 NoLube (Version 1)

FOR MODELS BEFORE JANUARY 2013

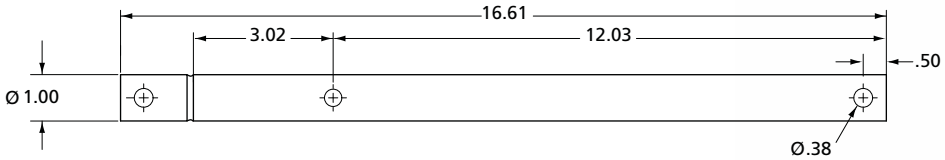

PART NO.	WEIGHT (lbs)
2111100000470	3.61

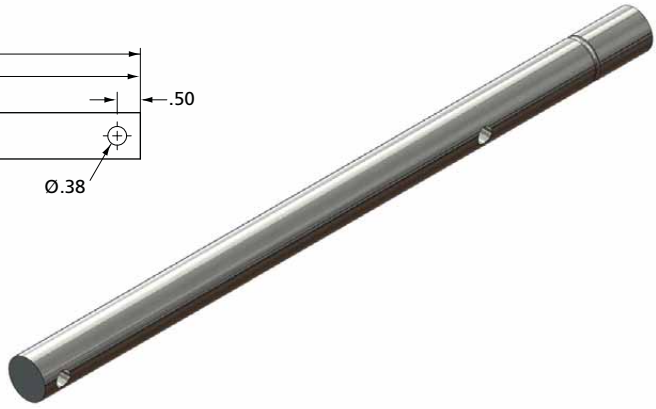

Atlas 65 & Atlas 65 NoLube (Version 2)

FOR MODELS AFTER JANUARY 2013

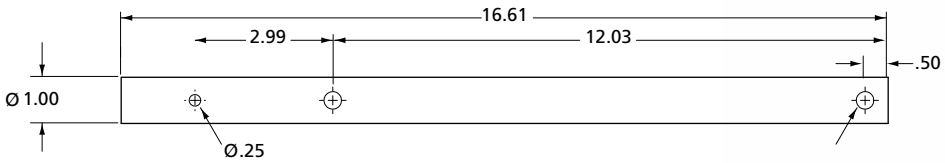

PART NO.	WEIGHT (lbs)
2111100000471	3.60

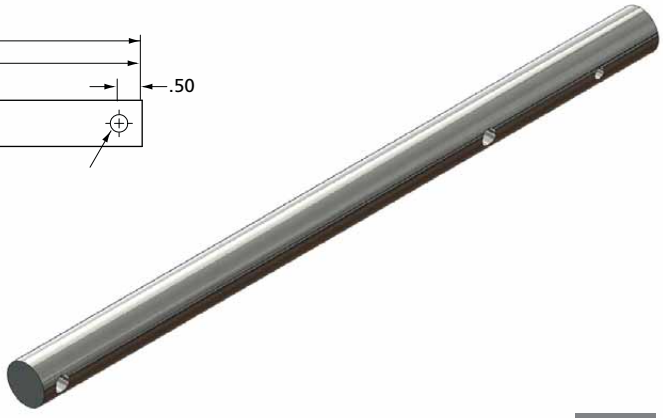

 Amendments and errors reserved. © SAF-HOLLAND, Inc.

Jack Shafts - Left Hand I-Beam

50000 & 50000 NoLube™ (LG5)

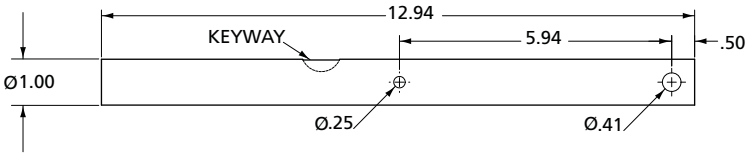

PART NO.	WEIGHT (lbs)
LG0369-01	2.80

CLASSIC (LG2T)

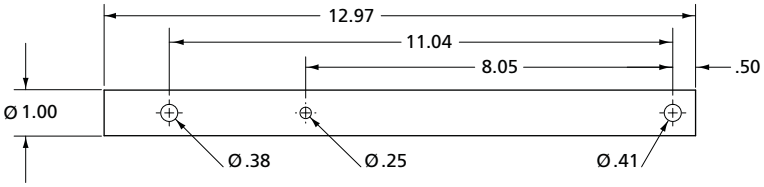

PART NO.	WEIGHT (lbs)
LG-750004-04	1.27

MARK V & MARK V Heavy Duty

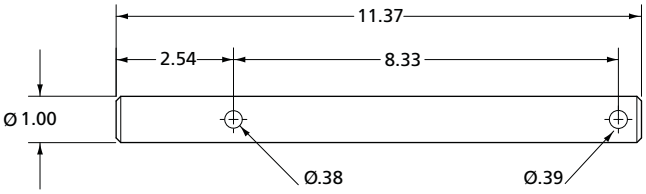

PART NO.	WEIGHT (lbs)
XA-V-06623-D	2.46

XL-LG11389PM-en-US Rev F 08-2014 Amendments and errors reserved. © SAF-HOLLAND, Inc.

Jack Shafts - Left Hand I-Beam

CLASSIC (LG2T)

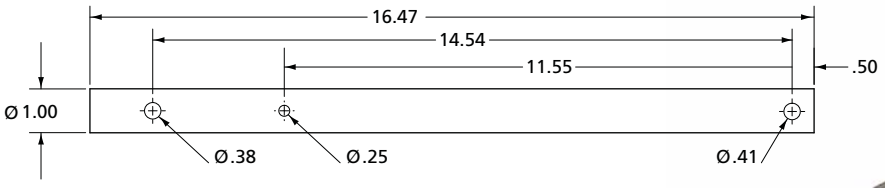

PART NO.	WEIGHT (lbs)
LG-750004-05	1.27

MARK V & MARK V Heavy Duty

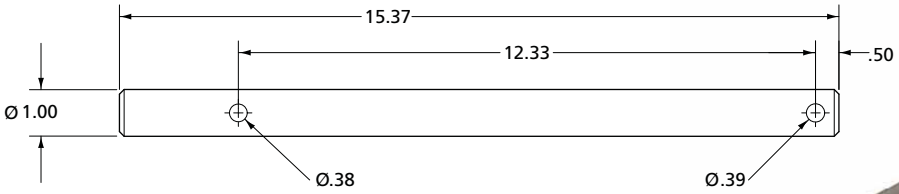

PART NO.	WEIGHT (lbs)
XA-V-06623-F	2.46

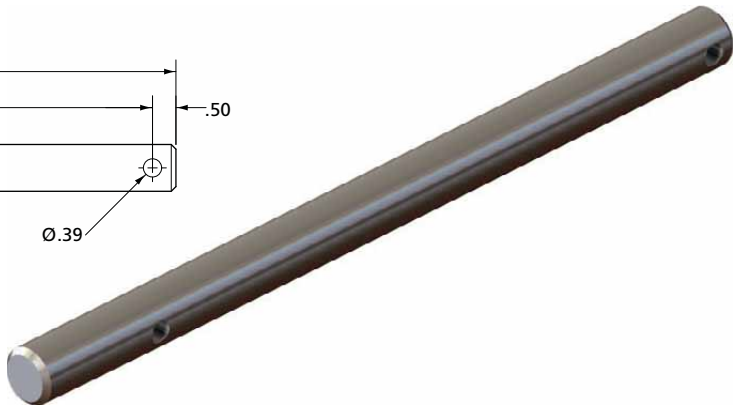

Jack Shafts - Left Hand Conventional

51000 & 51000 NoLube™ (LG4)
Fast Gear & Fast Gear NoLube™ (FG4)

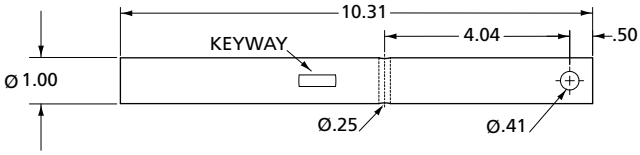

PART NO.	WEIGHT (lbs)
LG0946-02	2.22

ATLAS 55 & ATLAS 55 NoLube™ (LG4)

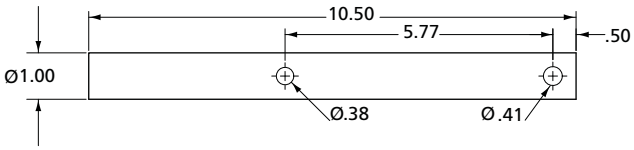

PART NO.	WEIGHT (lbs)
LG2964-02	2.24

 Amendments and errors reserved. © SAF-HOLLAND, Inc.

Jack Shafts - Left Hand Conventional

Atlas 65 & Atlas 65 NoLube (Version 1)

FOR MODELS BEFORE JANUARY 2013

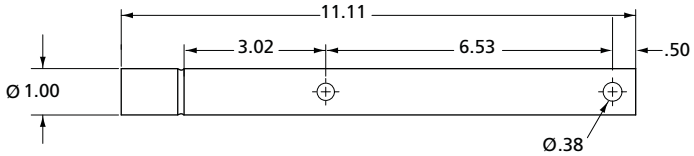

PART NO.	WEIGHT (lbs)
2111100000440	2.39

Atlas 65 & Atlas 65 NoLube (Version 2)

FOR MODELS AFTER JANUARY 2013

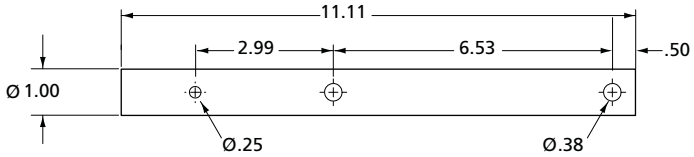

PART NO.	WEIGHT (lbs)
2111100000441	2.38

50000 & 50000 NoLube™ (LG5)

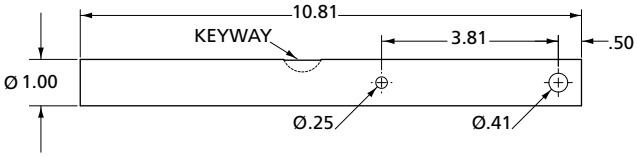

PART NO.	WEIGHT (lbs)
LG0369-05	2.33

CMS2 & CMS3

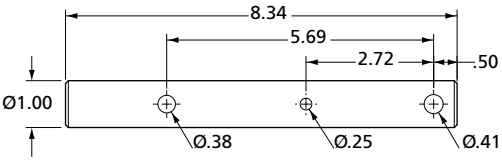

PART NO.	WEIGHT (lbs)
750450	1.77

XL-LG11389PM-en-US Rev F 08-2014 Amendments and errors reserved. © SAF-HOLLAND, Inc.

Jack Shafts - Left Hand Conventional

CLASSIC (LG2T)

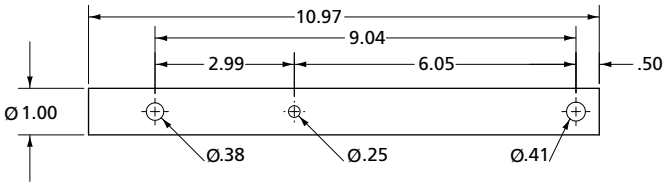

PART NO.	WEIGHT (lbs)
LG-750004-02	2.35

MARK V & MARK V Heavy Duty

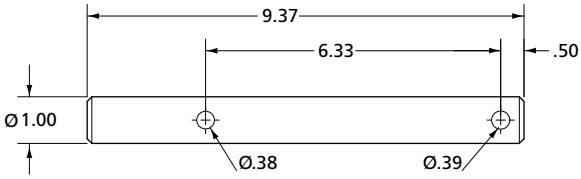

PART NO.	WEIGHT (lbs)
XA-V-06623-C	2.02

Jack Shafts - Left Hand Reverse

51000 & 51000 NoLube™ (LG4)
Fast Gear & Fast Gear NoLube™ (FG4)

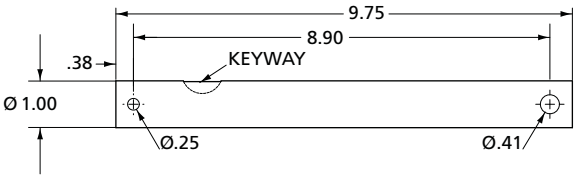

PART NO.	WEIGHT (lbs)
LG0948	2.10

ATLAS 55 & ATLAS 55 NoLube™ (LG4)

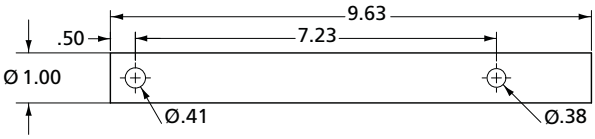

PART NO.	WEIGHT (lbs)
LG2964-03	2.05

 Amendments and errors reserved. © SAF-HOLLAND, Inc.

SAF-HOLLAND Group

Jack Shafts - Left Hand Reverse

Atlas 65 & Atlas 65 NoLube (Version 1)

FOR MODELS BEFORE JANUARY 2013

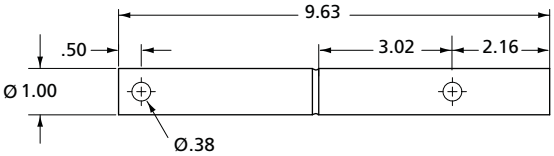

PART NO.	WEIGHT (lbs)
2111100000450	2.06

Atlas 65 & Atlas 65 NoLube (Version 2)

FOR MODELS AFTER JANUARY 2013

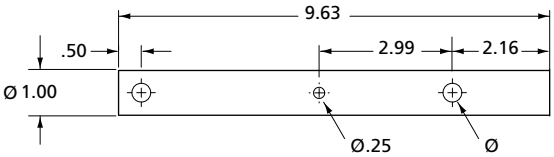

PART NO.	WEIGHT (lbs)
2111100000451	2.05

50000 & 50000 NoLube™ (LG5)

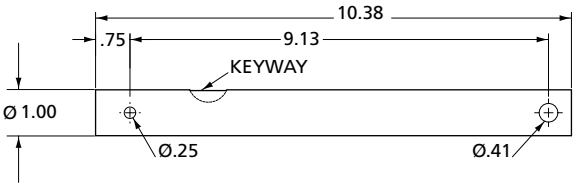

PART NO.	WEIGHT (lbs)
LG0436	2.24

CMS2 & CMS3

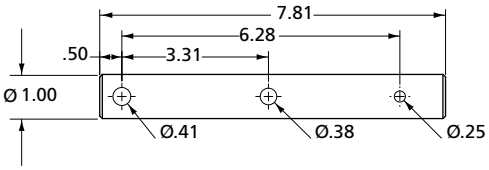

PART NO.	WEIGHT (lbs)
750452	1.65

XL-LG11389PM-en-US Rev F 08-2014 Amendments and errors reserved. © SAF-HOLLAND, Inc.

Jack Shafts - Left Hand Reverse

MARK V & MARK V Heavy Duty

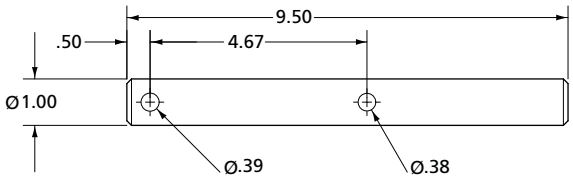

PART NO.	WEIGHT (lbs)
XA-V-06623-B	2.05

CLASSIC (LG2T)

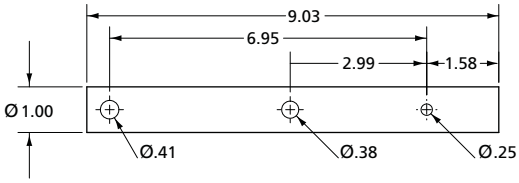

PART NO.	WEIGHT (lbs)
LG-750004-03	1.94

Jack Shafts - Drop Leg

FOR MODELS BEFORE SEPTEMBER 2010

4700 & 4701 Series (LG47)

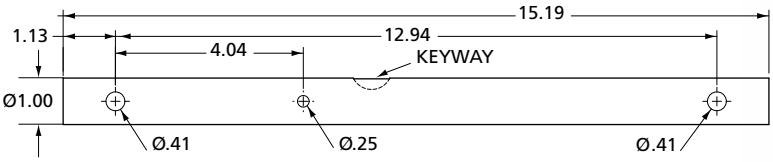

PART NO.	WEIGHT (lbs)
LG0189-01	3.27

FOR MODELS AFTER SEPTEMBER 2010

4700 & 4701 Series (LG47)

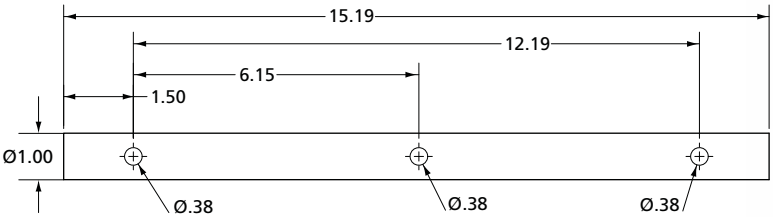

PART NO.	WEIGHT (lbs)
LG2964-101	3.26

 Amendments and errors reserved. © SAF-HOLLAND, Inc.

Jack Shafts - Right Hand Universal

51000 & 51000 NoLube™ (LG4),

FOR MODELS BEFORE SEPTEMBER 2010

4700 & 4701 Series (LG47)

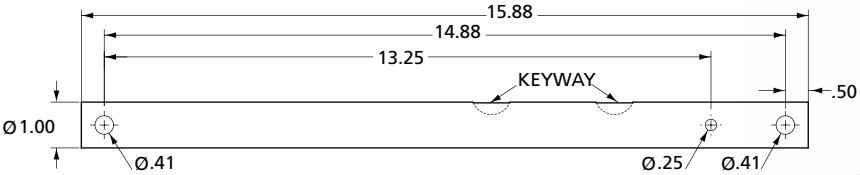

PART NO.	WEIGHT (lbs)
LG0928	3.41

ATLAS 55 & ATLAS 55 NoLube™ (LG4),

FOR MODELS AFTER SEPTEMBER 2010

4700 & 4701 Series (LG47)

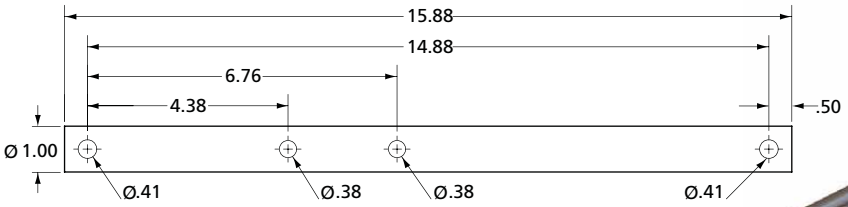

PART NO.	WEIGHT (lbs)
LG2963-01	3.37

Atlas 65 & Atlas 65 NoLube (Version 1)

FOR MODELS BEFORE JANUARY 2013

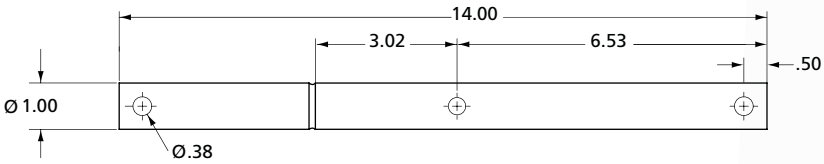

PART NO.	WEIGHT (lbs)
2111100000430	3.00

Atlas 65 & Atlas 65 NoLube (Version 2)

FOR MODELS AFTER JANUARY 2013

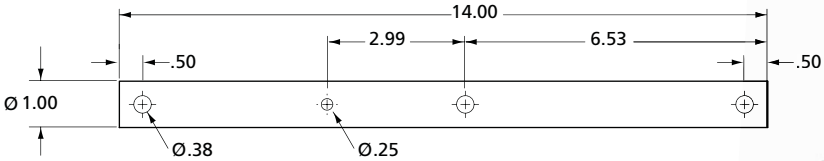

PART NO.	WEIGHT (lbs)
2111100000431	2.99

XL-LG11389PM-en-US Rev F 08-2014 Amendments and errors reserved. © SAF-HOLLAND, Inc.

Jack Shafts - Right Hand Universal

50000 & 50000 NoLube™ (LG5)

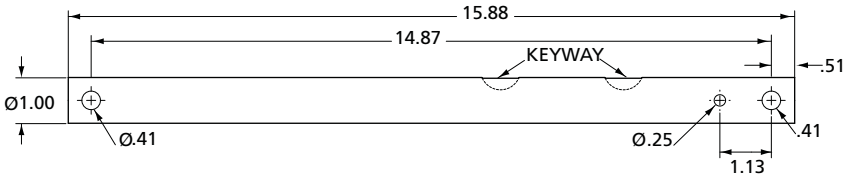

PART NO.	WEIGHT (lbs)
LG0260	3.41

Fast Gear & Fast Gear NoLube™ (FG4)

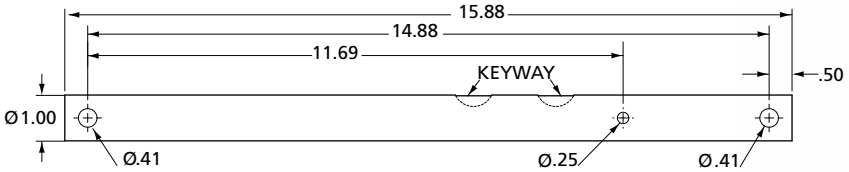

PART NO.	WEIGHT (lbs)
LG2147	3.41

Jack Shafts - Right Hand Universal

CMS2

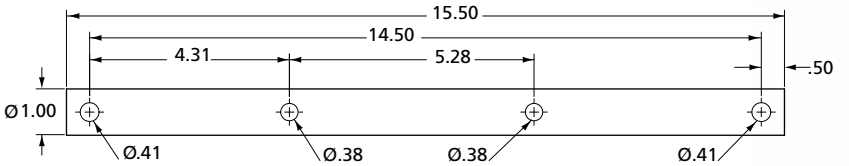

PART NO.	WEIGHT (lbs)
750002	3.30

CLASSIC (LG2T)

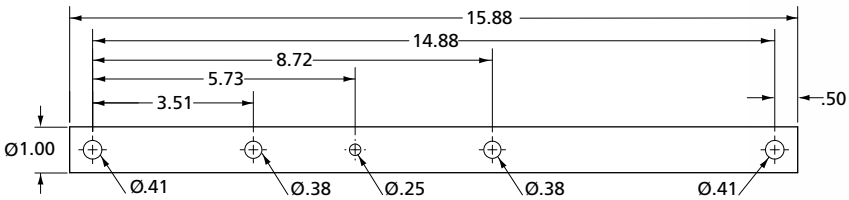

PART NO.	WEIGHT (lbs)
LG-750002-01	3.40

 Amendments and errors reserved. © SAF-HOLLAND, Inc.

Jack Shafts - Right Hand Universal

CMS3

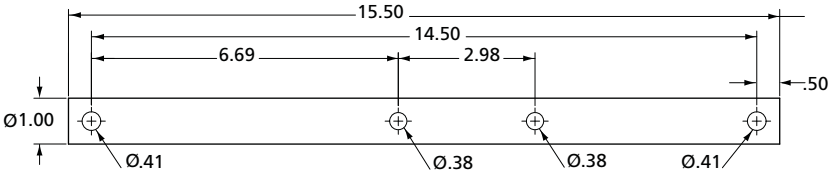

PART NO.	WEIGHT (lbs)
180000	3.30

MARK V & MARK V Heavy Duty

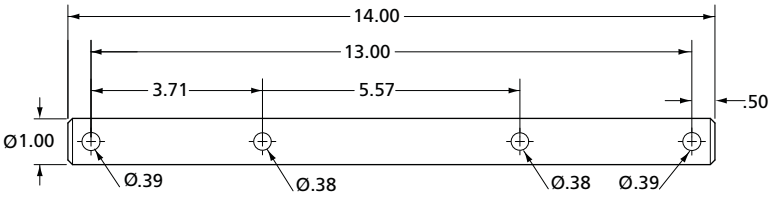

PART NO.	WEIGHT (lbs)
XA-V-06624-A	2.98

Jack Shafts - Right Hand I-Beam

51000 & 51000 NoLube™ (LG4)

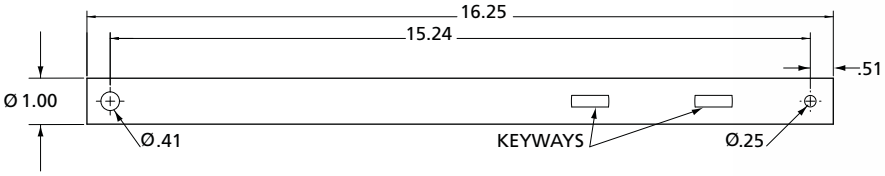

PART NO.	WEIGHT (lbs)
LG0947	3.13

ATLAS 55 & ATLAS 55 NoLube™ (LG4)

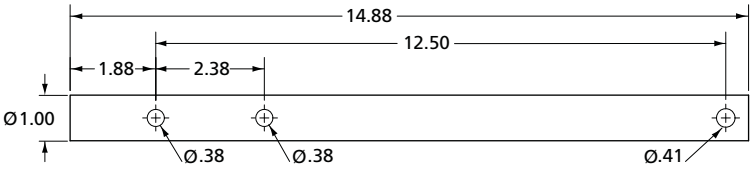

PART NO.	WEIGHT (lbs)
LG2963-04	3.20

XL-LG11389PM-en-US Rev F 08-2014 Amendments and errors reserved. © SAF-HOLLAND, Inc.

Jack Shafts - Right Hand I-Beam

Atlas 65 & Atlas 65 NoLube (Version 1)

FOR MODELS BEFORE JANUARY 2013

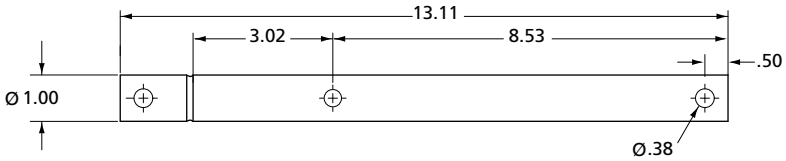

PART NO.	WEIGHT (lbs)
2111100000460	2.83

Atlas 65 & Atlas 65 NoLube (Version 2)

FOR MODELS AFTER JANUARY 2013

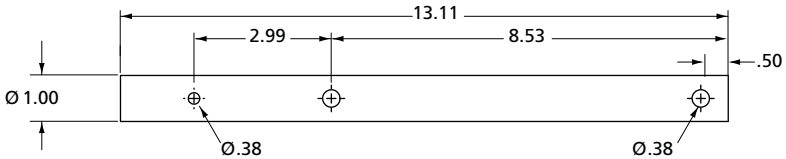

PART NO.	WEIGHT (lbs)
2111100000461	2.83

Atlas 65 & Atlas 65 NoLube (Version 1)

FOR MODELS BEFORE JANUARY 2013

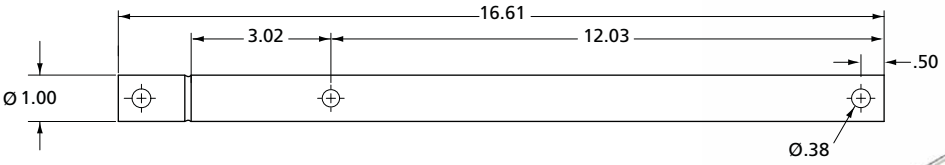

PART NO.	WEIGHT (lbs)
2111100000470	3.61

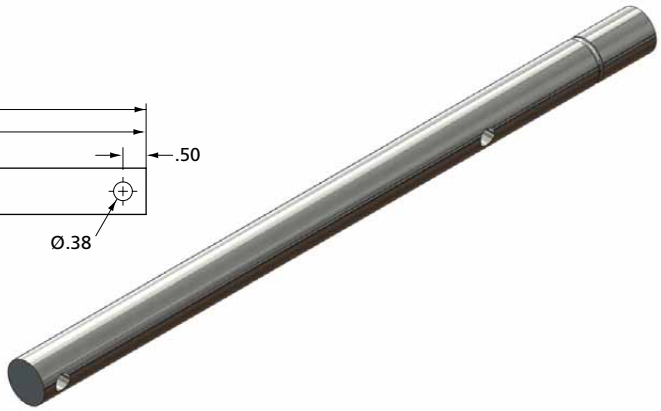

Atlas 65 & Atlas 65 NoLube (Version 2)

FOR MODELS AFTER JANUARY 2013

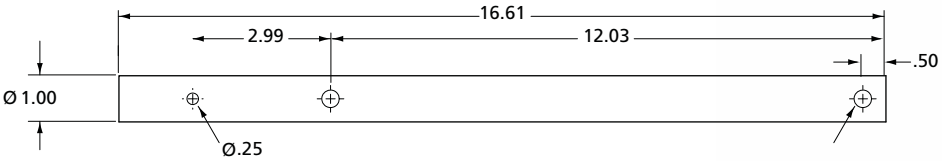

PART NO.	WEIGHT (lbs)
2111100000471	3.60

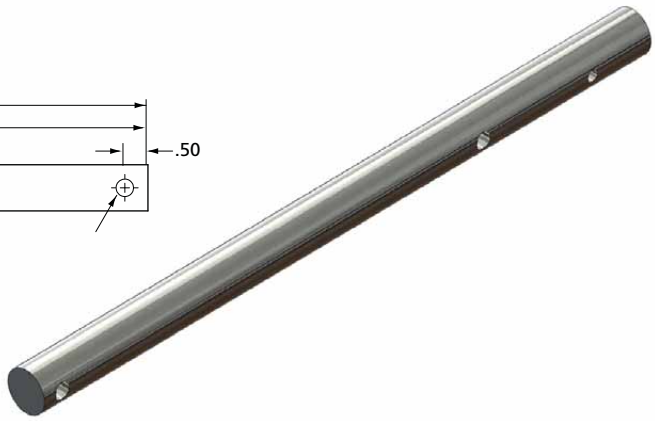

 Amendments and errors reserved. © SAF-HOLLAND, Inc.

Jack Shafts - Right Hand I-Beam

50000 & 50000 NoLube™ (LG5)

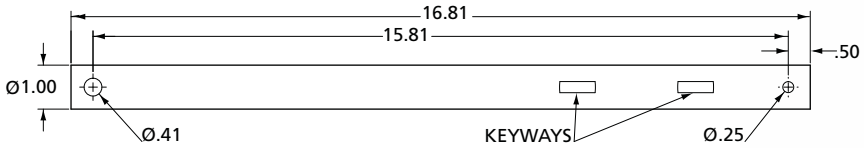

PART NO.	WEIGHT (lbs)
LG0370-01	3.65

Fast Gear & Fast Gear NoLube™ (FG4)

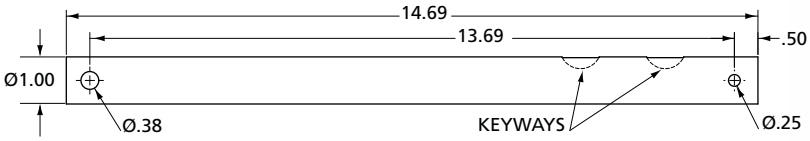

PART NO.	WEIGHT (lbs)
LG2187	3.18

CLASSIC (LG2T)

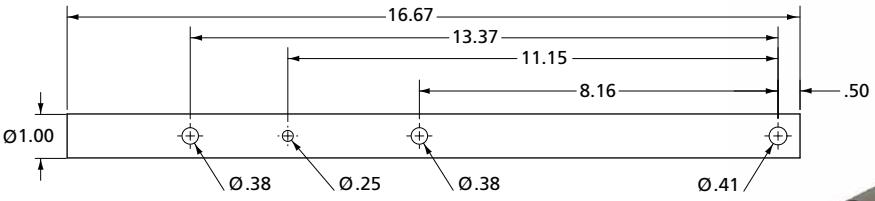

PART NO.	WEIGHT (lbs)
LG-750002-04	1.63

MARK V & MARK V Heavy Duty

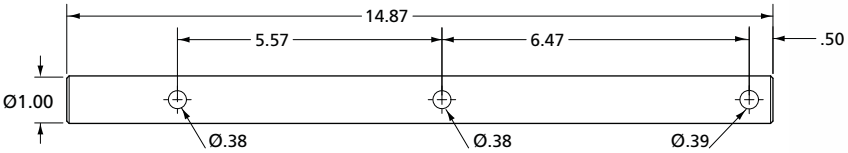

PART NO.	WEIGHT (lbs)
XA-V-06624-D	3.22

XL-LG11389PM-en-US Rev F 08-2014 Amendments and errors reserved. © SAF-HOLLAND, Inc.

Jack Shafts - Right Hand Extended I-Beam

MARK V & MARK V Heavy Duty

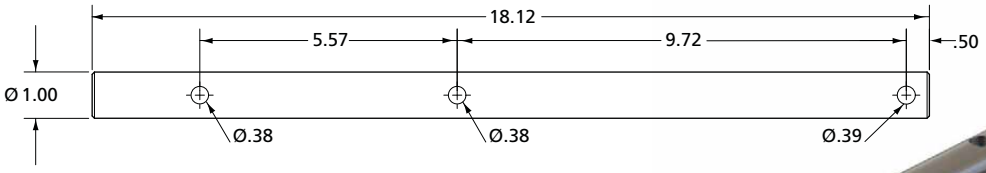

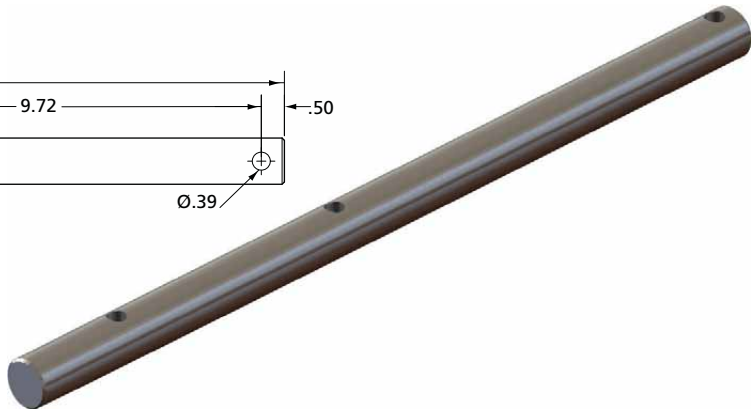

PART NO.	WEIGHT (lbs)
XA-V-06624-F	3.94

Jack Shafts - Right Hand Conventional

51000 & 51000 NoLube™ (LG4)

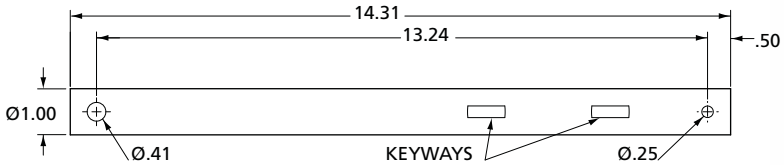

PART NO.	WEIGHT (lbs)
LG0947-02	3.09

ATLAS 55 & ATLAS 55 NoLube™ (LG4)

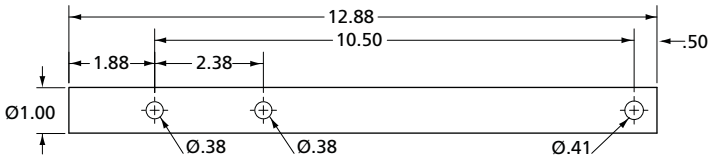

PART NO.	WEIGHT (lbs)
LG2963-02	2.74

 Amendments and errors reserved. © SAF-HOLLAND, Inc.

Jack Shafts - Right Hand Extended I-Beam

Atlas 65 & Atlas 65 NoLube (Version 1)

FOR MODELS BEFORE JANUARY 2013

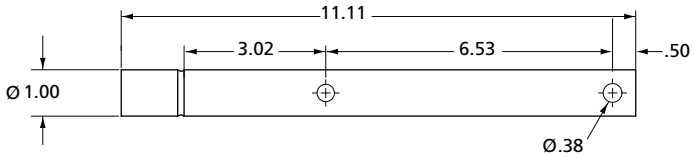

PART NO.	WEIGHT (lbs)
2111100000440	2.39

Atlas 65 & Atlas 65 NoLube (Version 2)

FOR MODELS AFTER JANUARY 2013

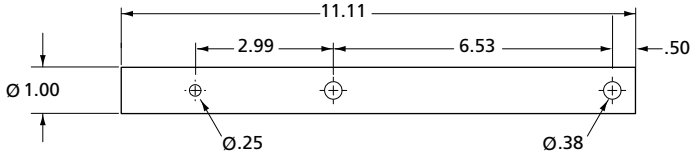

PART NO.	WEIGHT (lbs)
2111100000441	2.38

Jack Shafts - Right Hand Conventional

50000 & 50000 NoLube™ (LG5)

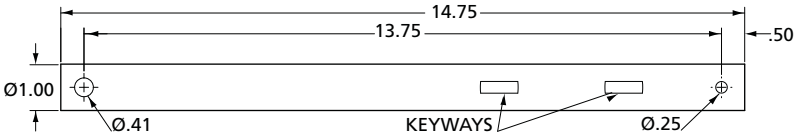

PART NO.	WEIGHT (lbs)
LG0370-05	3.20

Fast Gear & Fast Gear NoLube™ (FG4)

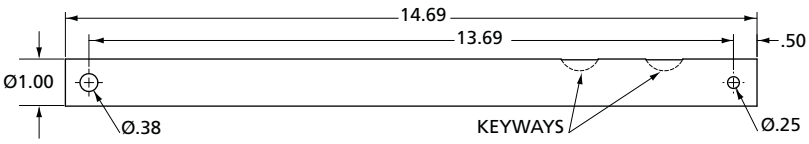

PART NO.	WEIGHT (lbs)
LG2187-01	2.74

XL-LG11389PM-en-US Rev F 08-2014 Amendments and errors reserved. © SAF-HOLLAND, Inc.

Jack Shafts - Right Hand Conventional

CMS2

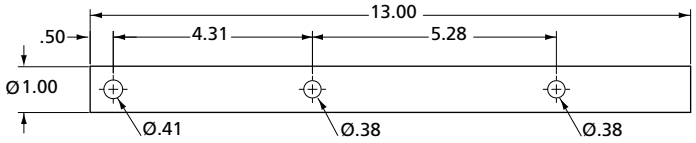

PART NO.	WEIGHT (lbs)
750241	2.78

CLASSIC (LG2T)

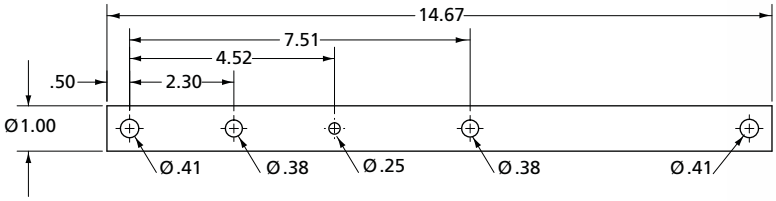

PART NO.	WEIGHT (lbs)
LG-750002-02	3.15

CMS3

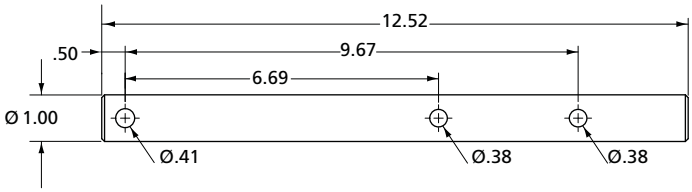

PART NO.	WEIGHT (lbs)
180010	2.67

MARK V & MARK V Heavy Duty

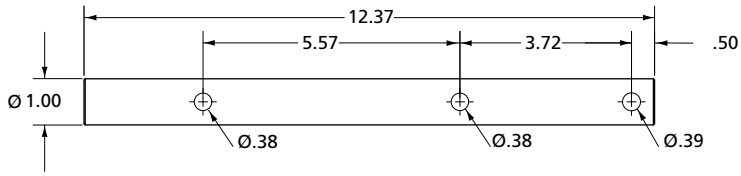

PART NO.	WEIGHT (lbs)
XA-V-06624-C	2.66

 Amendments and errors reserved. © SAF-HOLLAND, Inc.

Jack Shafts - Right Hand Reverse

50000 & 50000 NoLube™ (LG5)

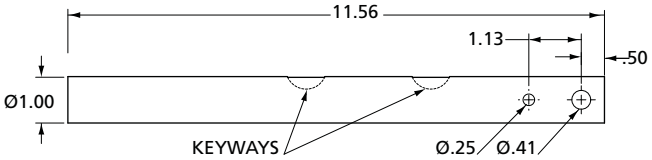

PART NO.	WEIGHT (lbs)
LG0438	2.49

Fast Gear & Fast Gear NoLube™ (FG4)

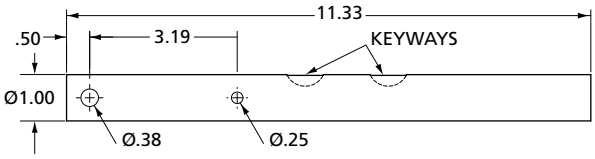

PART NO.	WEIGHT (lbs)
LG2197	2.44

CMS2

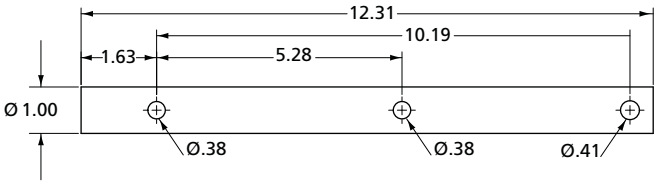

PART NO.	WEIGHT (lbs)
750245	2.63

CLASSIC (LG2T)

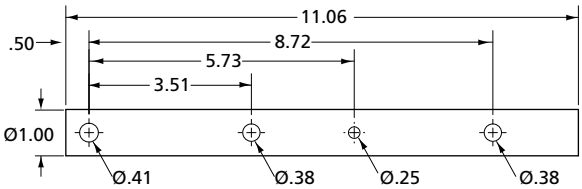

PART NO.	WEIGHT (lbs)
LG-750002-03	2.36

XL-LG11389PM-en-US Rev F 08-2014 Amendments and errors reserved. © SAF-HOLLAND, Inc.

Jack Shafts - Right Hand Reverse

51000 & 51000 NoLube™ (LG4)

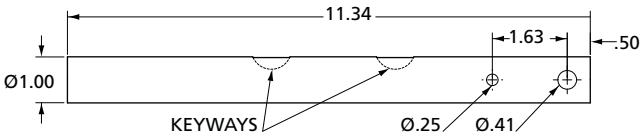

PART NO.	WEIGHT (lbs)
LG0949	2.44

ATLAS 55 & ATLAS 55 NoLube™ (LG4)

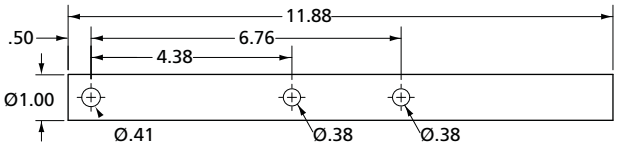

PART NO.	WEIGHT (lbs)
LG2963-03	2.52

Atlas 65 & Atlas 65 NoLube (Version 1)

FOR MODELS BEFORE JANUARY 2013

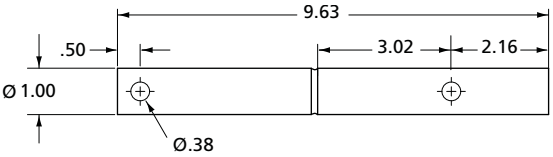

PART NO.	WEIGHT (lbs)
2111100000450	2.06

Atlas 65 & Atlas 65 NoLube (Version 2)

FOR MODELS AFTER JANUARY 2013

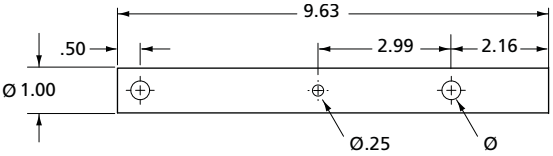

PART NO.	WEIGHT (lbs)
2111100000451	2.05

 Amendments and errors reserved. © SAF-HOLLAND, Inc.

Jack Shafts - Right Hand Reverse

CMS3

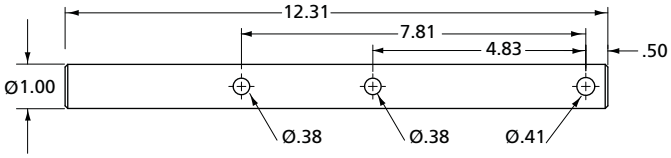

PART NO.	WEIGHT (lbs)
180016	2.62

MARK V & MARK V Heavy Duty

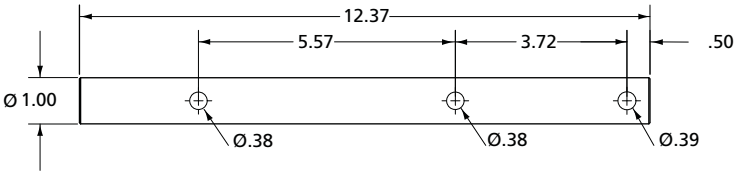

PART NO.	WEIGHT (lbs)
XA-V-06624-C	2.66

Shift Shafts - Right Hand Universal

51000 (LG4),
50000 (LG5)

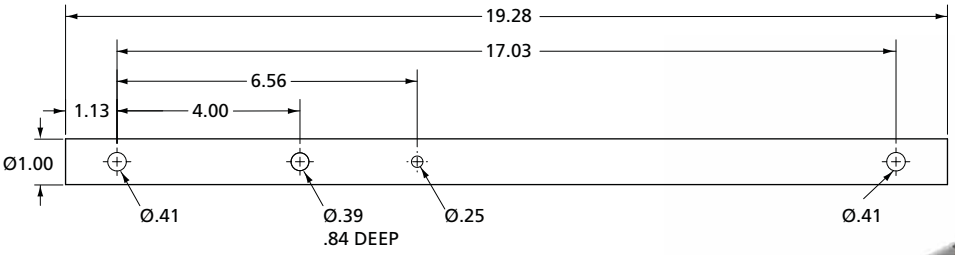

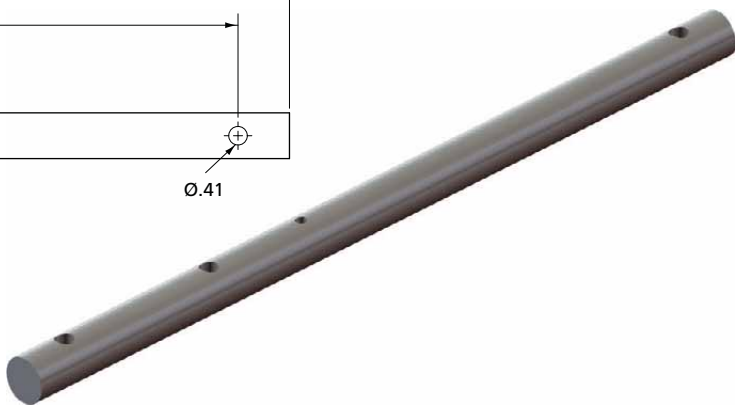

PART NO.	WEIGHT (lbs)
LG0261-01	4.15

XL-LG11389PM-en-US Rev F 08-2014 Amendments and errors reserved. © SAF-HOLLAND, Inc.

Shift Shafts - Right Hand Universal

51000 NoLube™ (LG4) & 50000 NoLube™ (LG5)

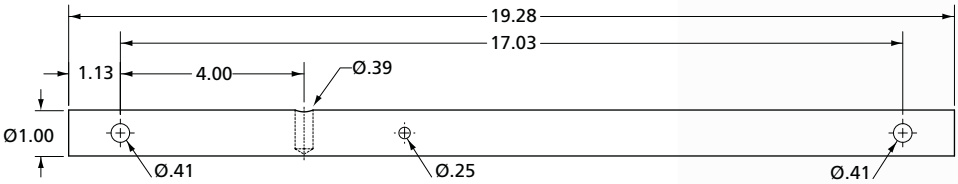

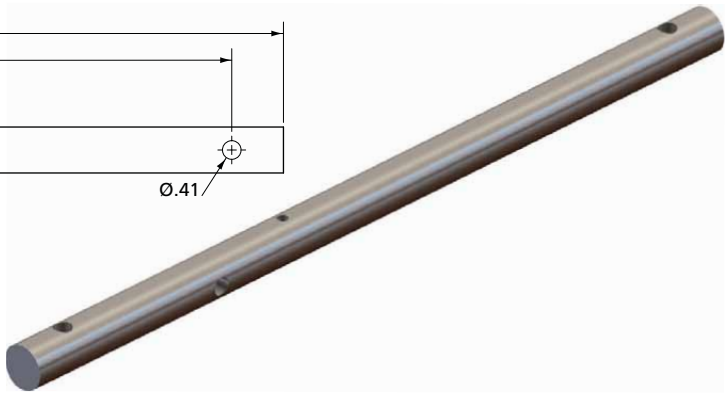

PART NO.	WEIGHT (lbs)
LG0861-01	4.15

ATLAS 55 & ATLAS 55 NoLube™ (LG4),

FOR MODELS AFTER SEPTEMBER 2010

4700 & 4701 Series (LG47)

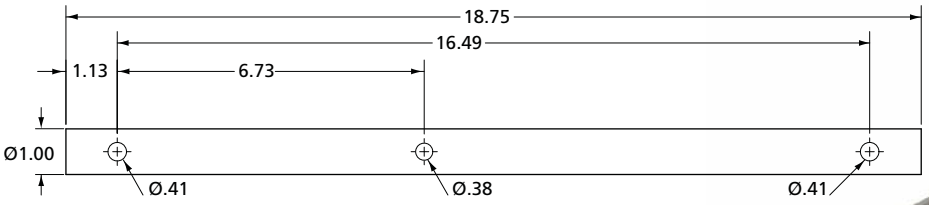

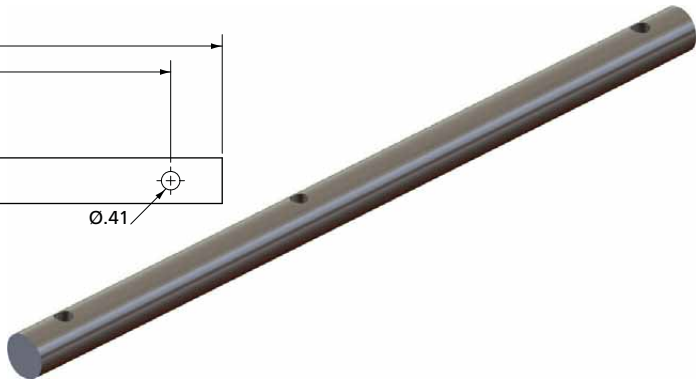

PART NO.	WEIGHT (lbs)
LG3011-01	4.05

CMS2 & CMS3

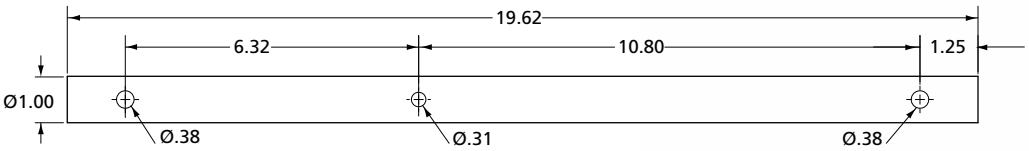

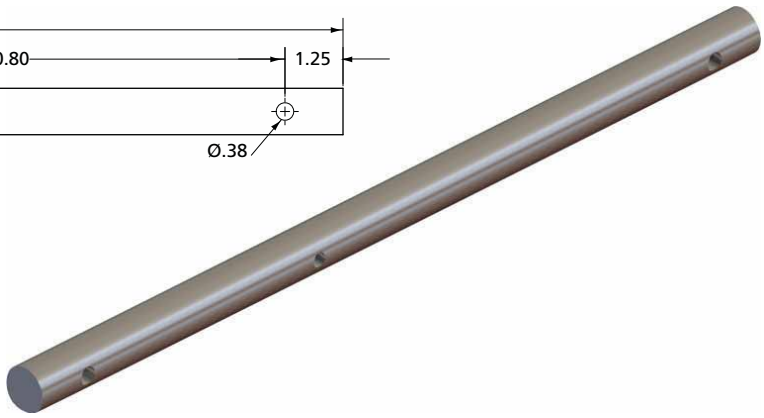

PART NO.	WEIGHT (lbs)
751175	4.26

 Amendments and errors reserved. © SAF-HOLLAND, Inc.

Shift Shafts - Right Hand Universal

CLASSIC (LG2T)

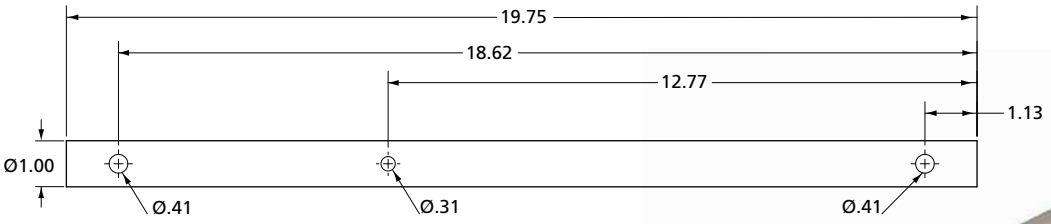

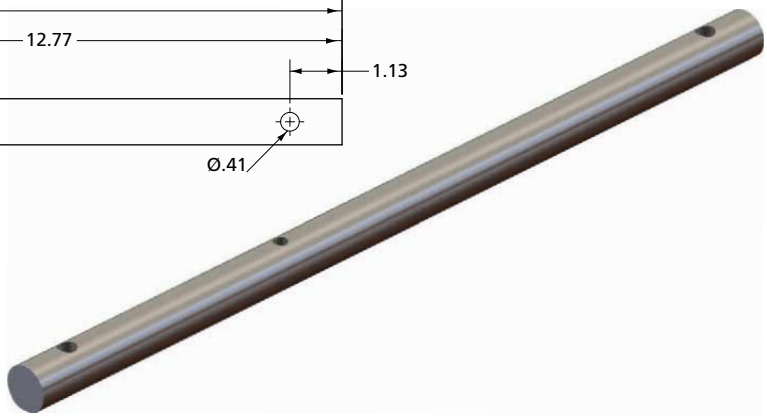

PART NO.	WEIGHT (lbs)
LG-751175-01	4.30

MARK V & MARK V Heavy Duty

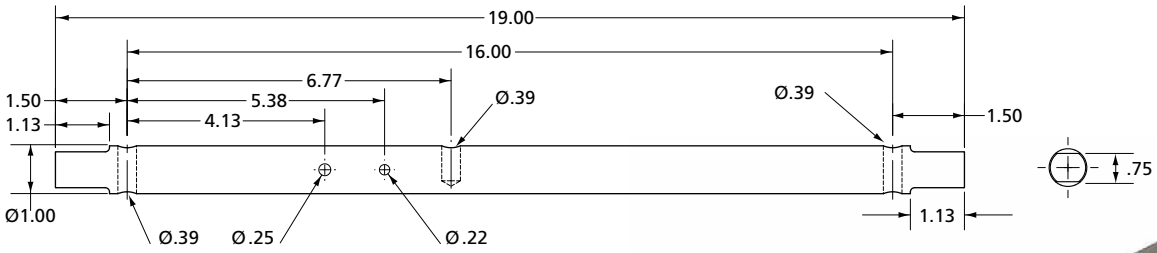

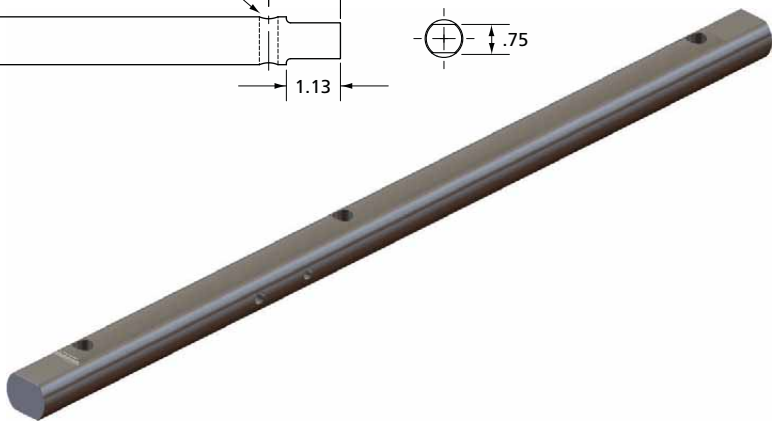

PART NO.	WEIGHT (lbs)
XA-V-06625-A	4.05

XL-LG11389PM-en-US Rev F 08-2014 Amendments and errors reserved. © SAF-HOLLAND, Inc.

Shift Shafts - Right Hand I-Beam Mount

51000 (LG4),
50000 (LG5)

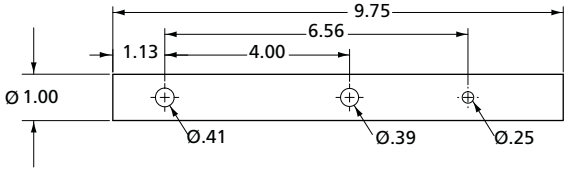

PART NO.	WEIGHT (lbs)
LG0371-01	2.08

51000 NoLube™ (LG4),
50000 NoLube™ (LG5)

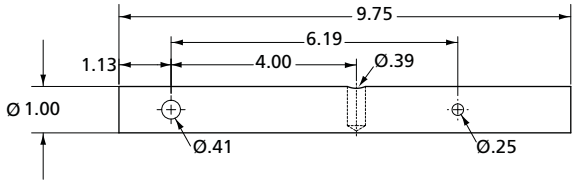

PART NO.	WEIGHT (lbs)
LG0859-01	2.08

ATLAS 55 & ATLAS 55 NoLube™ (LG4)

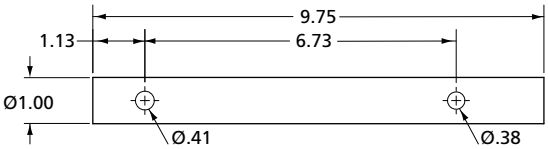

PART NO.	WEIGHT (lbs)
LG3011-02	2.09

MARK V & MARK V Heavy Duty

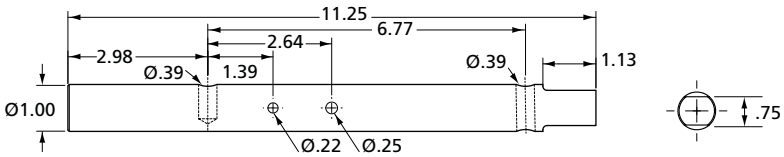

PART NO.	WEIGHT (lbs)
XA-V-06625-C	2.39

 Amendments and errors reserved. © SAF-HOLLAND, Inc.

SAF-HOLLAND Group

Shift Shafts - Right Hand Extended I-Beam Mount

MARK V & MARK V Heavy Duty

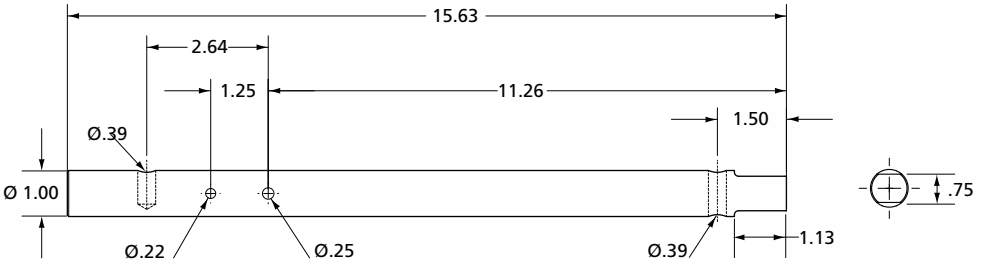

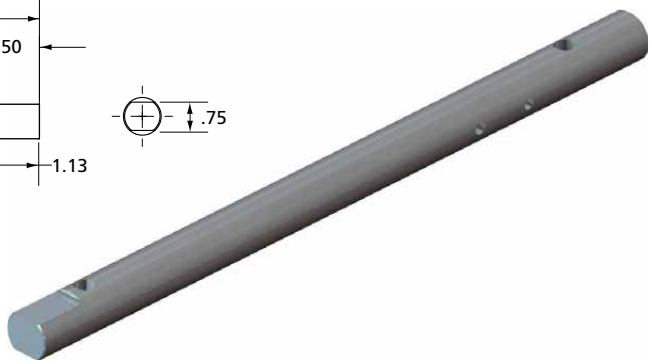

PART NO.	WEIGHT (lbs)
XA-V-06625-F	3.37

Shift Shafts - Right Hand Conventional

51000 (LG4),
50000 (LG5)

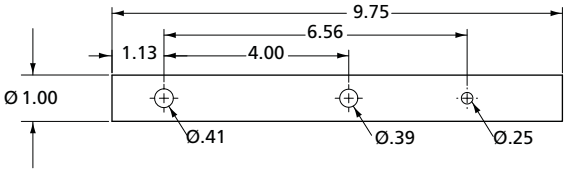

PART NO.	WEIGHT (lbs)
LG0371-01	2.08

51000 NoLube™ (LG4),
50000 NoLube™ (LG5)

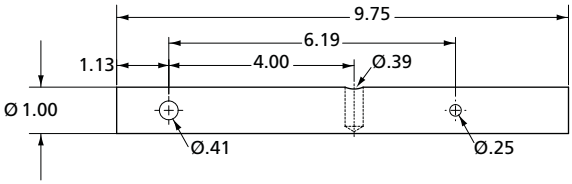

PART NO.	WEIGHT (lbs)
LG0859-01	2.08

XL-LG11389PM-en-US Rev F 08-2014 Amendments and errors reserved. © SAF-HOLLAND, Inc.

Shift Shafts - Right Hand Conventional

ATLAS 55 & ATLAS 55 NoLube™ (LG4)

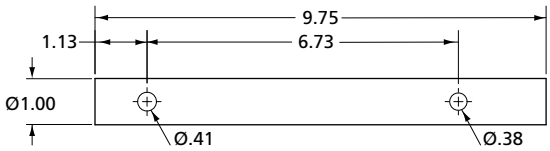

PART NO.	WEIGHT (lbs)
LG3011-02	2.09

CMS2 & CMS3

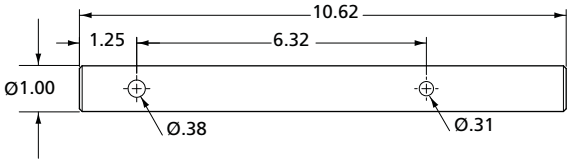

PART NO.	WEIGHT (lbs)
751198	2.31

CLASSIC (LG2T)

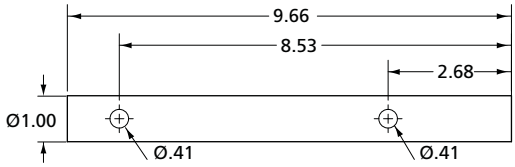

PART NO.	WEIGHT (lbs)
LG-751175-02	2.09

MARK V & MARK V Heavy Duty

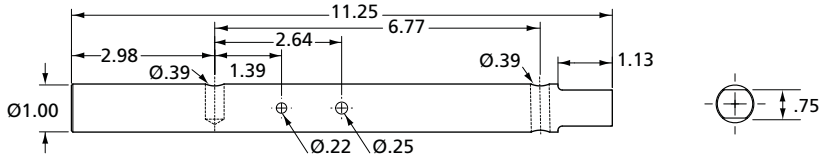

PART NO.	WEIGHT (lbs)
XA-V-06625-C	2.39

 Amendments and errors reserved. © SAF-HOLLAND, Inc.

SAF-HOLLAND Group

Shift Shafts - Right Hand Reverse

CMS2 & CMS3

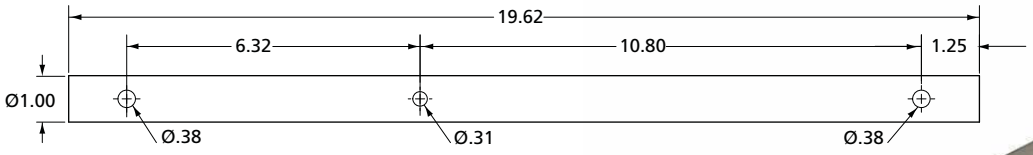

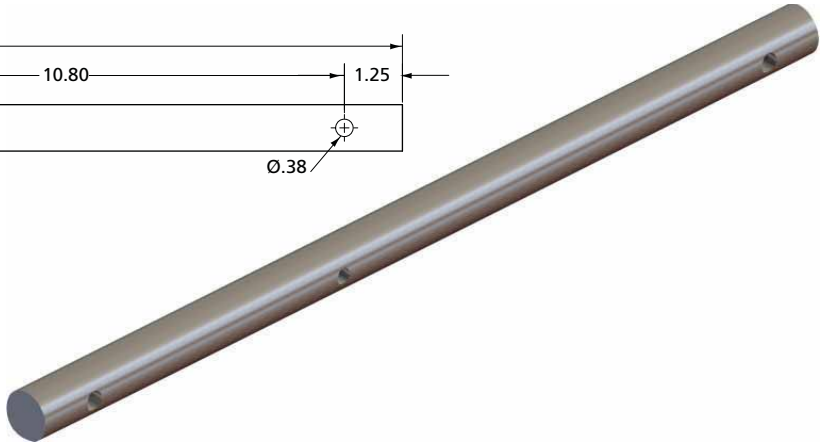

PART NO.	WEIGHT (lbs)
751175	4.26

CLASSIC (LG2T)

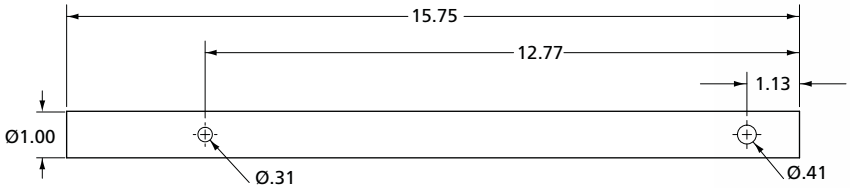

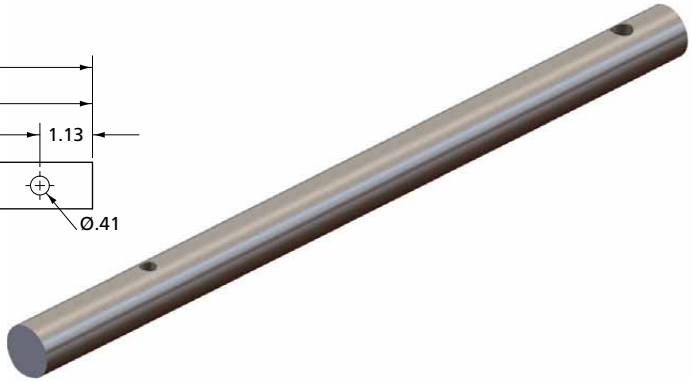

PART NO.	WEIGHT (lbs)
LG-751175-03	3.46

MARK V & MARK V Heavy Duty

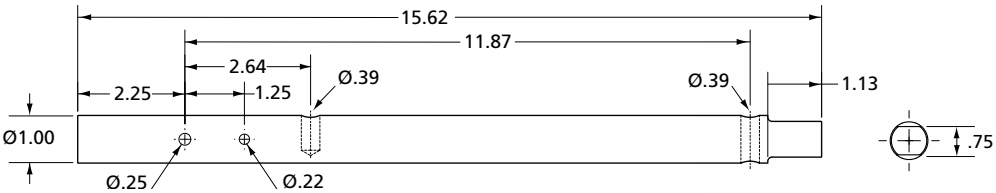

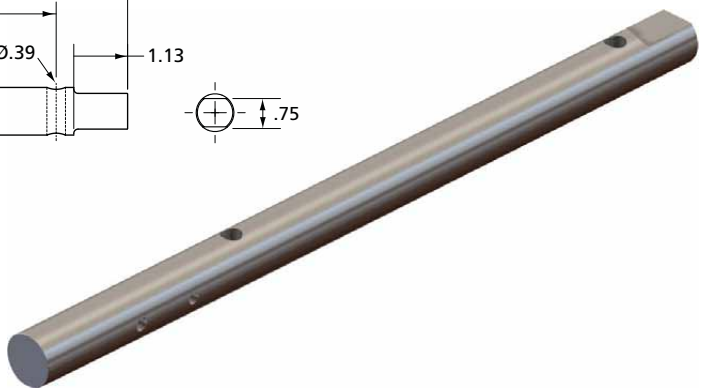

PART NO.	WEIGHT (lbs)
XA-V-06625-B	3.37

XL-LG11389PM-en-US Rev F 08-2014 Amendments and errors reserved. © SAF-HOLLAND, Inc.

Shift Shafts - Right Hand Reverse

51000 (LG4), 50000 (LG5)

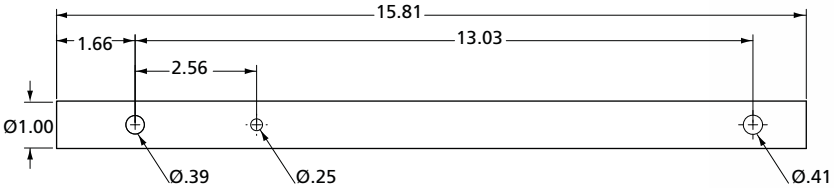

PART NO.	WEIGHT (lbs)
LG0437	3.42

51000 NoLube™ (LG4), 50000 NoLube™ (LG5)

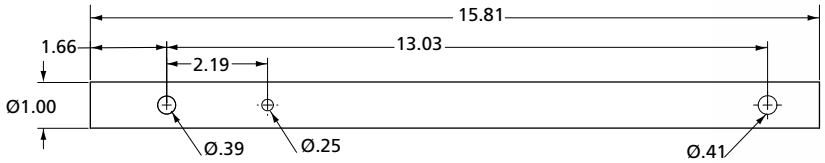

PART NO.	WEIGHT (lbs)
LG0858	3.42

ATLAS 55 & ATLAS 55 NoLube™ (LG4)

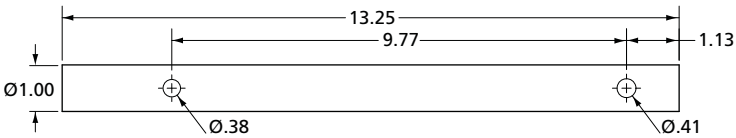

PART NO.	WEIGHT (lbs)
LG3011-03	2.87

 Amendments and errors reserved. © SAF-HOLLAND, Inc.

SAF-HOLLAND Group

Bevel Gears

51000 & 51000 NoLube™ (LG4), 50000 & 50000 NoLube™ (LG5), Fast Gear & Fast Gear NoLube (FG4),

FOR MODELS BEFORE SEPTEMBER 2010

4700 & 4701 Series (LG47)

PART NO.	WEIGHT (lbs)
XA-LG0570-01	1.61

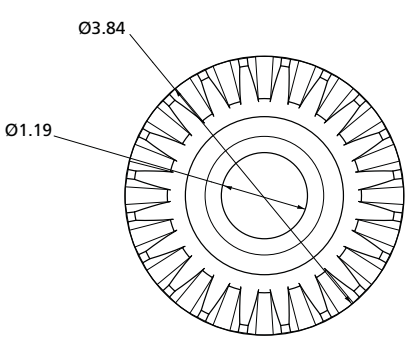

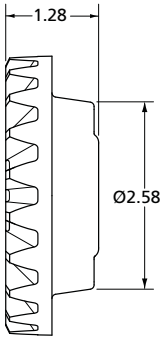

ATLAS 55 & ATLAS 55 NoLube™ (LG4), CLASSIC (LG2T), ATLAS 65, ATLAS 65 NoLube™

FOR MODELS AFTER SEPTEMBER 2010

4700 & 4701 Series (LG47)

PART NO.	WEIGHT (lbs)
LG2884	1.53

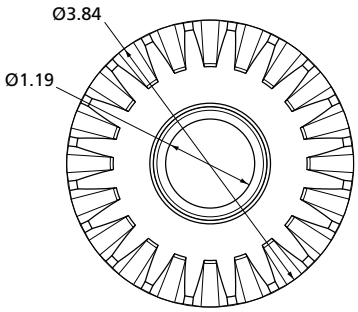

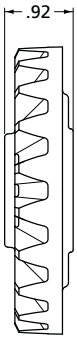

CMS2

PART NO.	WEIGHT (lbs)
730590	1.94

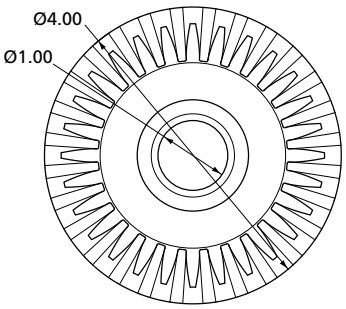

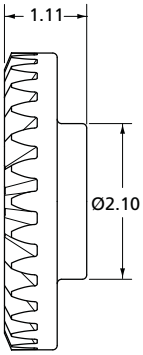

XL-LG11389PM-en-US Rev F 08-2014 Amendments and errors reserved. © SAF-HOLLAND, Inc.

Bevel Gears

CMS3

PART NO.	WEIGHT (lbs)
130004	1.98

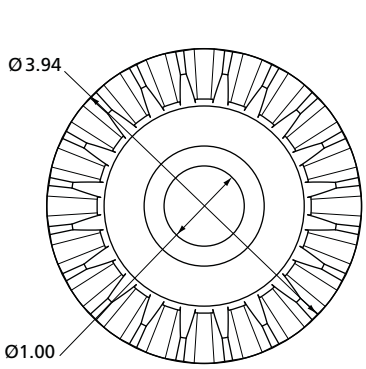

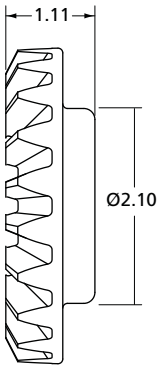

MARK V & MARK V Heavy Duty, JS2000

PART NO.	WEIGHT (lbs)
XA-V-06601	2.52

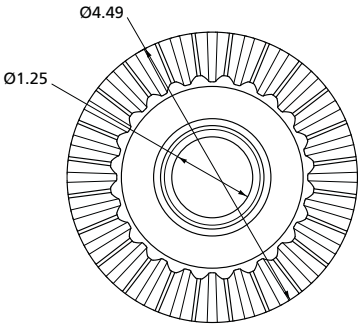

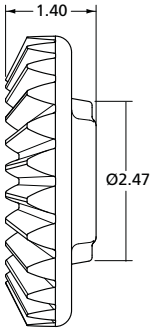

Dual Pin Drop Leg (LGD700), 48000 Series (LG87), 49000 Series (LG97)

PART NO.	WEIGHT (lbs)
XB-LG2027	1.16

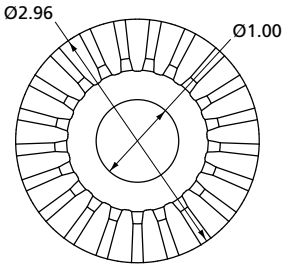

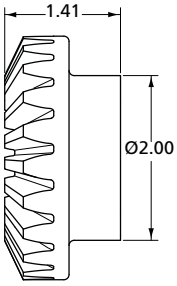

 Amendments and errors reserved. © SAF-HOLLAND, Inc.

Pinion Gears

51000 & 51000 NoLube™ (LG4), Fast Gear & FastGear NoLube™ (FG4), Formula 150,

FOR MODELS BEFORE SEPTEMBER 2010

4700 & 4701 Series (LG47)

PART NO.	WEIGHT (lbs)
XB-LG1823-01	.46

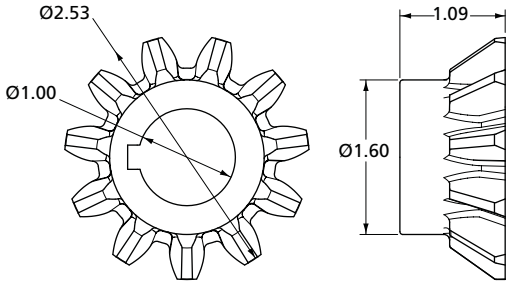

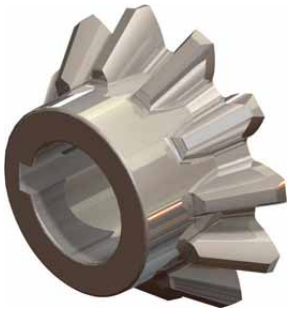

ATLAS 55 & ATLAS 55 NoLube™ (LG4), CLASSIC (LG2T), ATLAS 65, ATLAS 65 NoLube™

FOR MODELS AFTER SEPTEMBER 2010

4700 & 4701 Series (LG47)

PART NO.	WEIGHT (lbs)
LG1823-02	.46

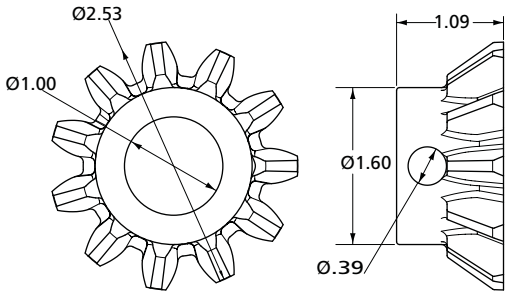

50000 & 50000 NoLube™ (LG5)

PART NO.	WEIGHT (lbs)
LG0531-02	.58

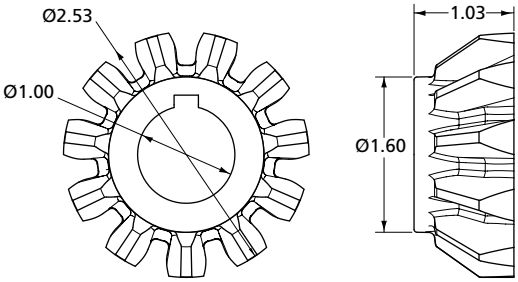

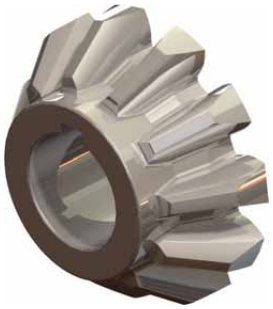

XL-LG11389PM-en-US Rev F 08-2014 Amendments and errors reserved. © SAF-HOLLAND, Inc.

Pinion Gears

CMS2

PART NO.	WEIGHT (lbs)
730011	.35

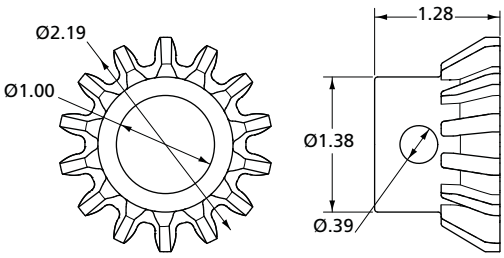

CMS3

PART NO.	WEIGHT (lbs)
130003	.39

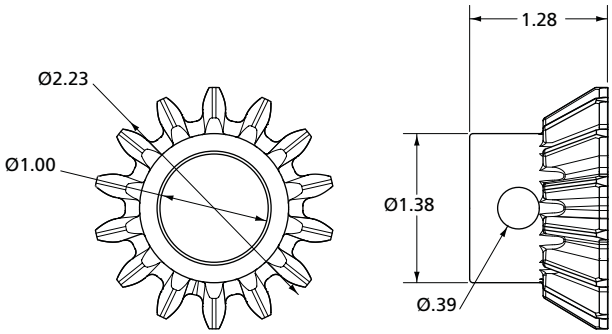

MARK V & MARK V Heavy Duty, JS2000 Series

PART NO.	WEIGHT (lbs)
XA-V-06600	1.22

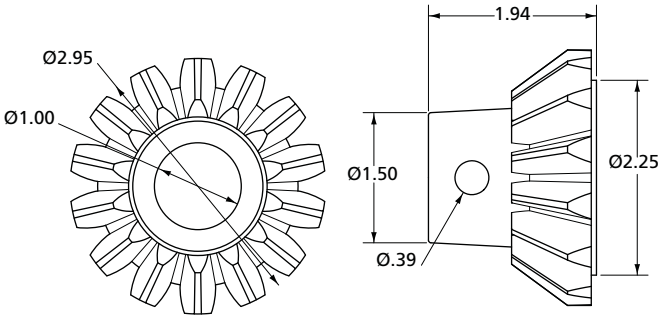

Dual Pin Drop Leg (LGD700), 48000 Series (LG8700), 49000 Series (LG9700)

PART NO.	WEIGHT (lbs)
XB-LG2026	.36

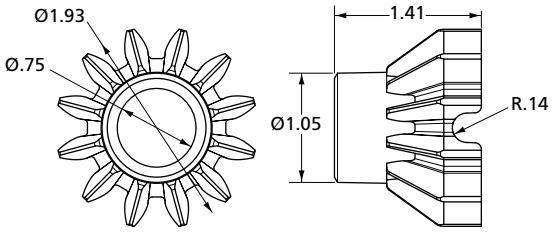

 Amendments and errors reserved. © SAF-HOLLAND, Inc.

Output Gears

51000 & 51000 NoLube™ (LG4), 50000 & 50000 NoLube™ (LG5),

FOR MODELS BEFORE SEPTEMBER 2010

4700 & 4701 Series (LG47)

PART NO.	WEIGHT (lbs)
LG0543-01	1.79

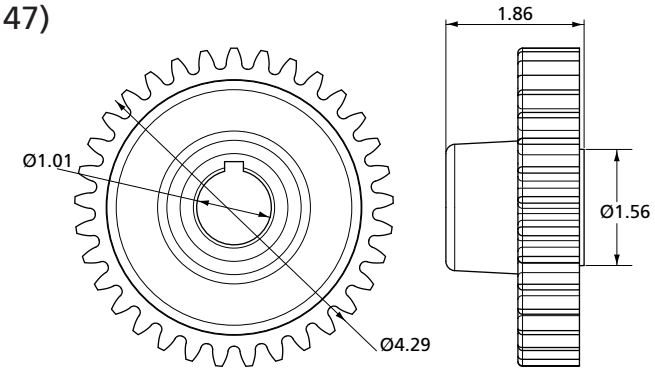

ATLAS 55 & ATLAS 55 NoLube™ (LG4), ATLAS 65, ATLAS 65 NoLube™

FOR MODELS AFTER SEPTEMBER 2010

4700 & 4701 Series (LG47)

PART NO.	WEIGHT (lbs)
LG2980	1.78

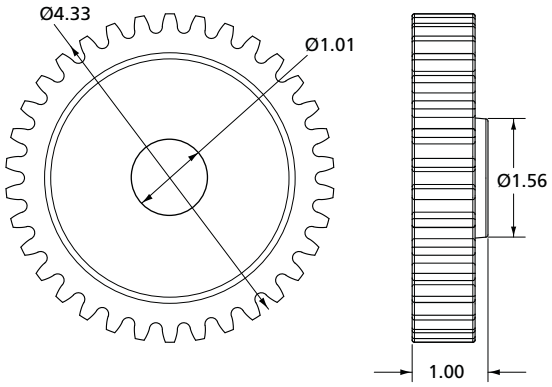

Fast Gear & Fast Gear NoLube™ (FG4)

PART NO.	WEIGHT (lbs)
LG0936-51	3.50

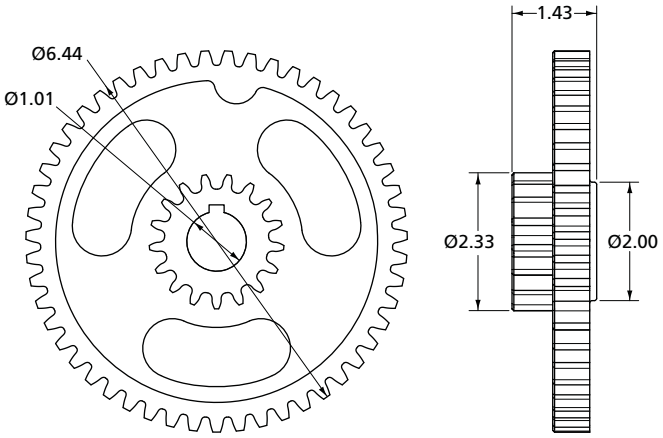

XL-LG11389PM-en-US Rev F 08-2014 Amendments and errors reserved. © SAF-HOLLAND, Inc.

Output Gears

CMS2, CLASSIC (LG2T)

PART NO.	WEIGHT (lbs)
750009	2.89

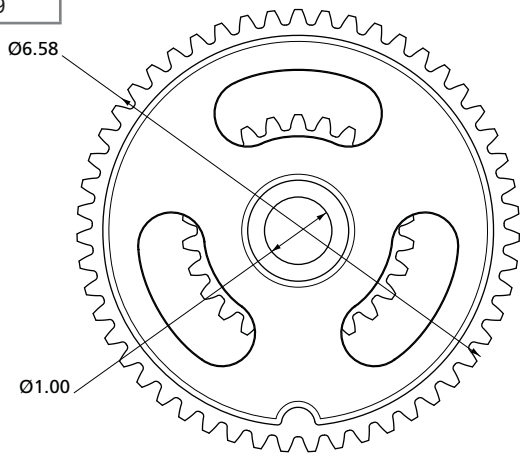

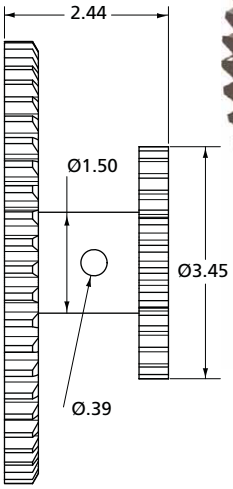

CMS3

PART NO.	WEIGHT (lbs)
130002	1.76

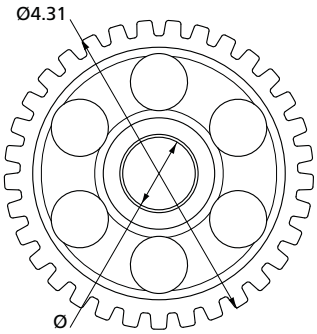

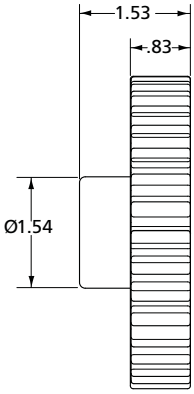

MARK V & MARK V Heavy Duty

PART NO.	WEIGHT (lbs)
XA-V-06603	.30

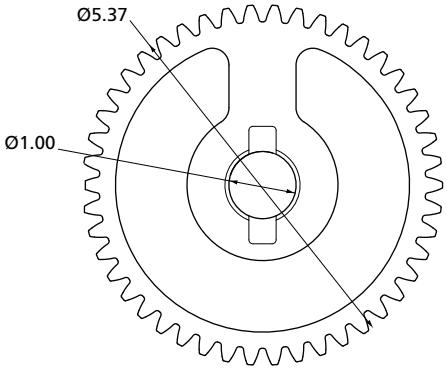

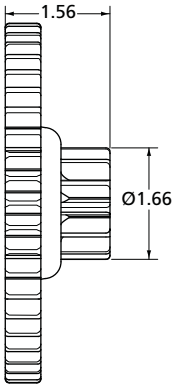

 Amendments and errors reserved. © SAF-HOLLAND, Inc.

SAF-HOLLAND Group

Input Gears Low

51000 NoLube™ (LG4), 50000 NoLube™ (LG5)

PART NO.	WEIGHT (lbs)
XB-LG0857-01	.37

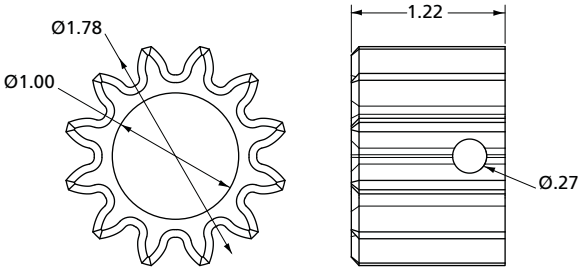

ATLAS 55 & ATLAS 55 NoLube™ (LG4), ATLAS 65, ATLAS 65 NoLube™

FOR MODELS AFTER SEPTEMBER 2010

4700 & 4701 Series (LG47)

PART NO.	WEIGHT (lbs)
LG2969	.26

Replaced By:

PART NO.	WEIGHT (lbs)
204010000050	.26

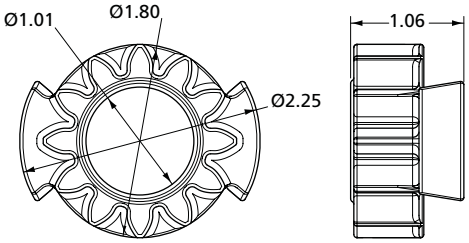

Fast Gear & Fast Gear NoLube™ (FG4) - Universal, I-Beam, & Conventional Mount

PART NO.	WEIGHT (lbs)
LG2463-01	2.06

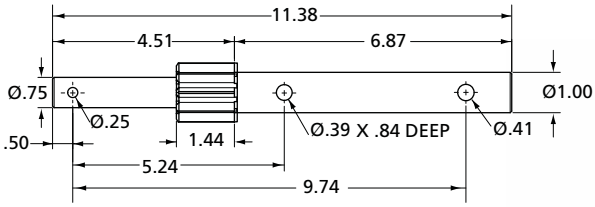

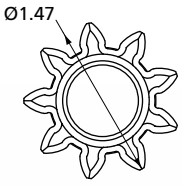

XL-LG11389PM-en-US Rev F 08-2014 Amendments and errors reserved. © SAF-HOLLAND, Inc.

Input Gears Low

Fast Gear & Fast Gear NoLube™ (FG4) - Reverse Mount

PART NO.	WEIGHT (lbs)
LG2464-01	1.31

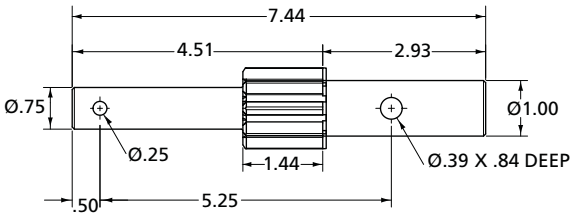

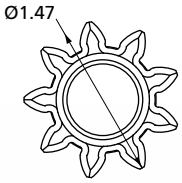

CMS2 & CMS3, CLASSIC (LG2T)

PART NO.	WEIGHT (lbs)
751173	.49

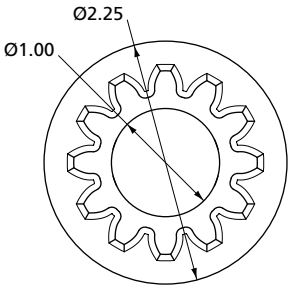

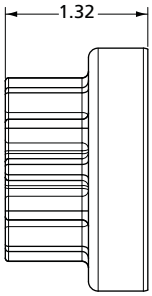

MARK V & MARK V Heavy Duty

PART NO.	WEIGHT (lbs)
XA-V-06604-1	1.24

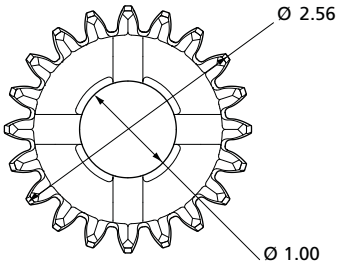

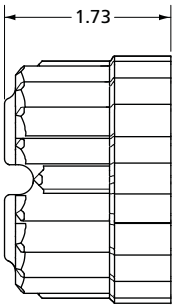

 Amendments and errors reserved. © SAF-HOLLAND, Inc.

SAF-HOLLAND Group

Input Gears High

51000 NoLube™ (LG4), 50000 NoLube™ (LG5)

PART NO.	WEIGHT (lbs)
XD-LG0856	1.83

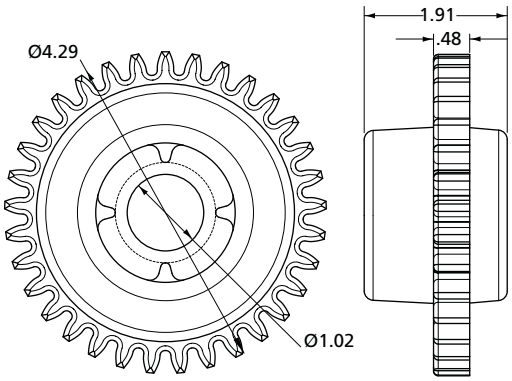

ATLAS 55 & ATLAS 55 NoLube™ (LG4), ATLAS 65, ATLAS 65 NoLube™

FOR MODELS AFTER SEPTEMBER 2010

4700 & 4701 Series (LG47)

PART NO.	WEIGHT (lbs)
LG2968	.94

Replaced By:

PART NO.	WEIGHT (lbs)
204010000060	.26

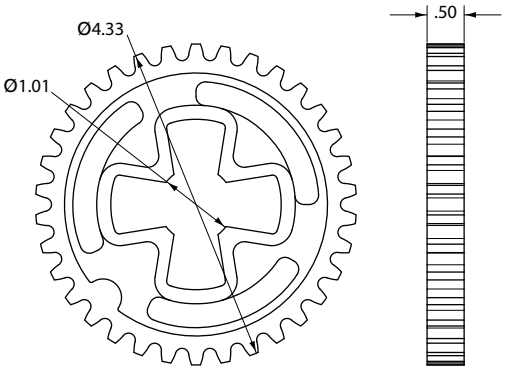

Fast Gear & Fast Gear NoLube™ (FG4)

PART NO.	WEIGHT (lbs)
LG2465-01	2.36

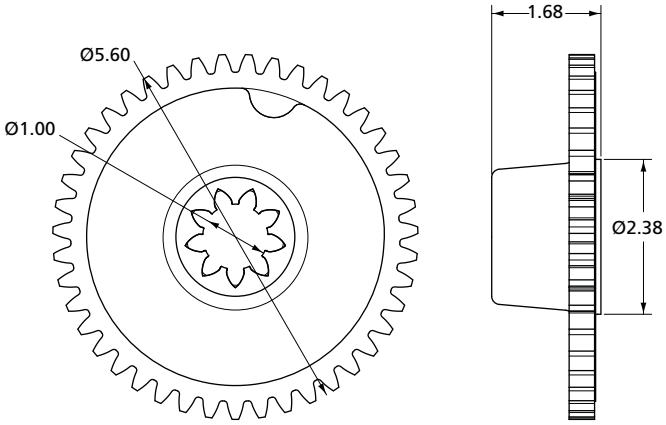

XL-LG11389PM-en-US Rev F 08-2014 Amendments and errors reserved. © SAF-HOLLAND, Inc.

Input Gears High

CMS2, CLASSIC (LG2T)

PART NO.	WEIGHT (lbs)
751174	1.29

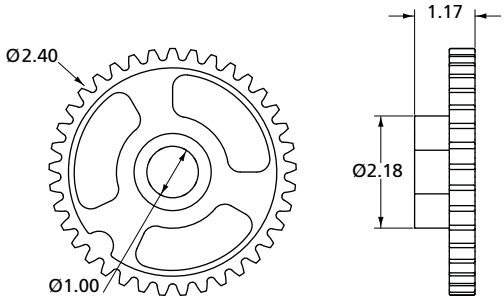

CMS3

PART NO.	WEIGHT (lbs)
130000	1.52

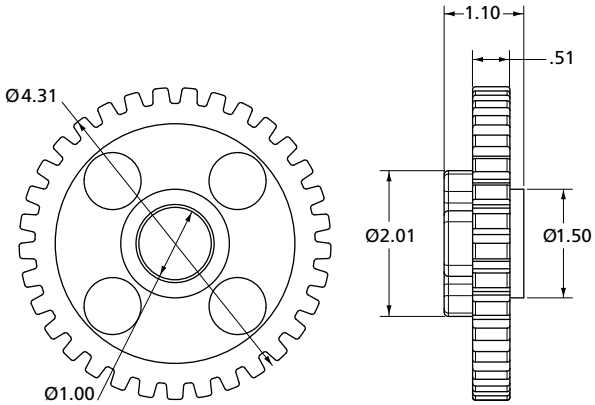

Input Gears High & Low

51000 (LG4), 50000 (LG5)

FOR MODELS BEFORE SEPTEMBER 2010

4700 & 4701 Series (LG47)

PART NO.	WEIGHT (lbs)
LG0541-01	1.50

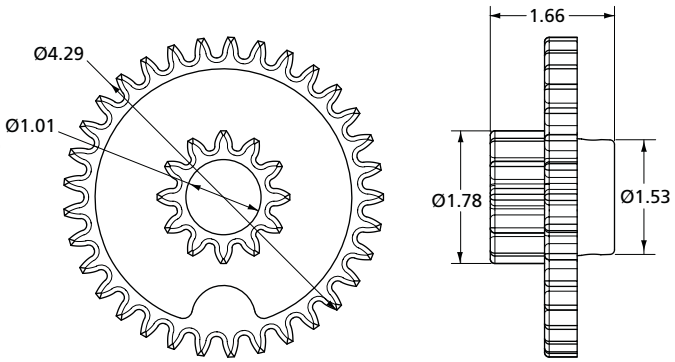

MARK V & MARK V Heavy Duty

PART NO.	WEIGHT (lbs)
XA-V-06606	.28

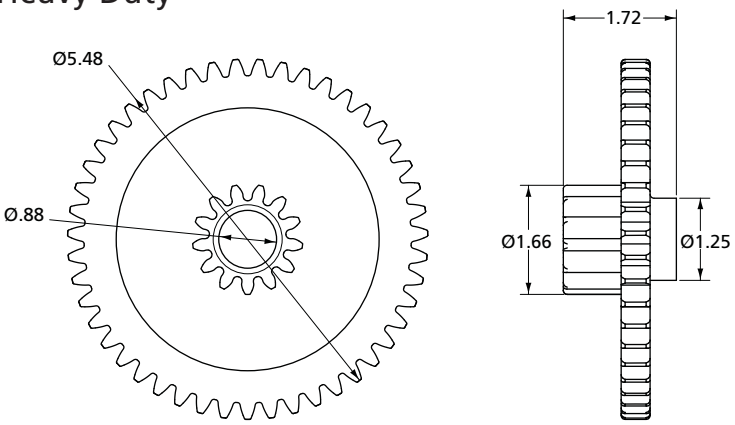

 Amendments and errors reserved. © SAF-HOLLAND, Inc.

Idler Gears

51000 & 51000 NoLube™ (LG4), 50000 & 50000 NoLube™ (LG5),

FOR MODELS BEFORE SEPTEMBER 2010

4700 & 4701 Series (LG47)

PART NO.	WEIGHT (lbs)
XB-LG0542-01	2.40

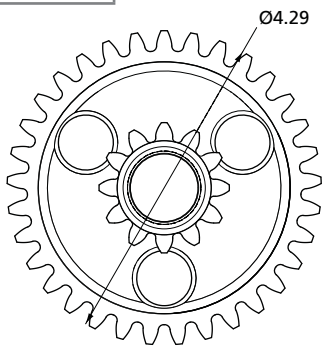

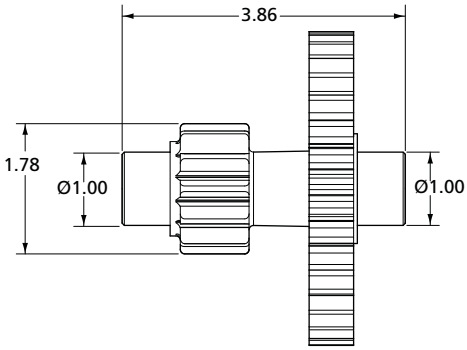

ATLAS 55 & ATLAS 55 NoLube™ (LG4), ATLAS 65, ATLAS 65 NoLube™

FOR MODELS AFTER SEPTEMBER 2010

4700 & 4701 Series (LG47)

PART NO.	WEIGHT (lbs)
LG2975	1.95

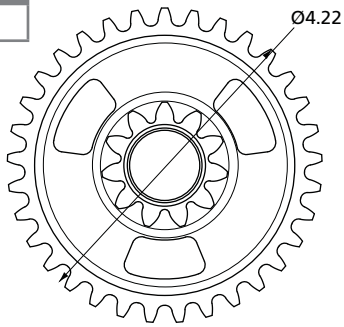

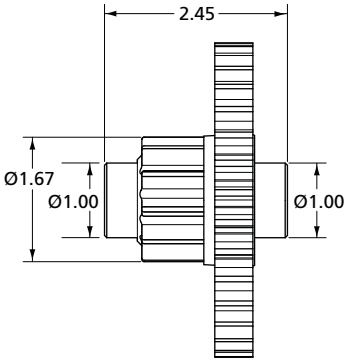

XL-LG11389PM-en-US Rev F 08-2014 Amendments and errors reserved. © SAF-HOLLAND, Inc.

Idler Gears

CMS3

PART NO.	WEIGHT (lbs)
130001	2.28

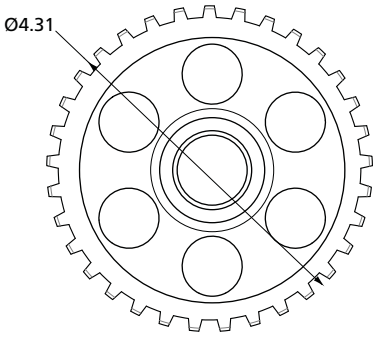

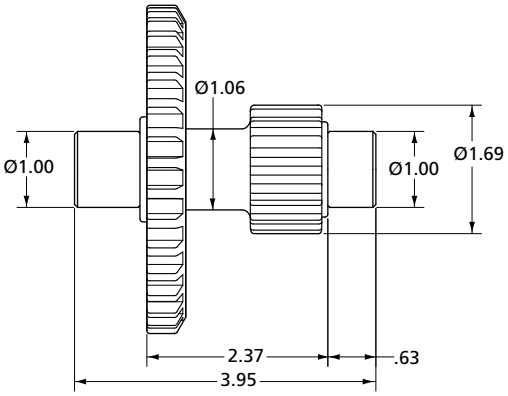

MARK V & MARK V Heavy Duty

PART NO.	WEIGHT (lbs)
XA-V-06602	1.72

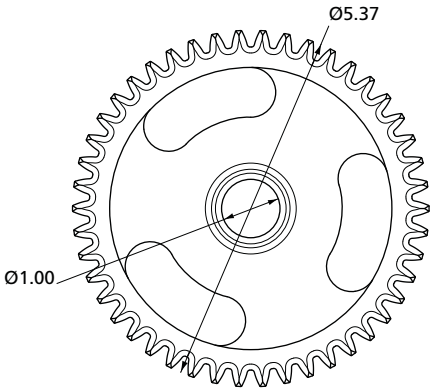

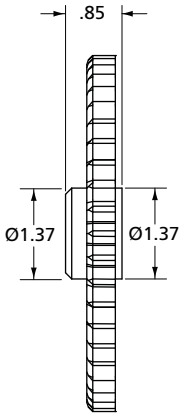

Input Gear Assembly Replacement

Fast Gear (FG4) Right Hand Old Style - Replaces LG0910, LG1928

PART NO.	WEIGHT (lbs)
RK-10980	4.42

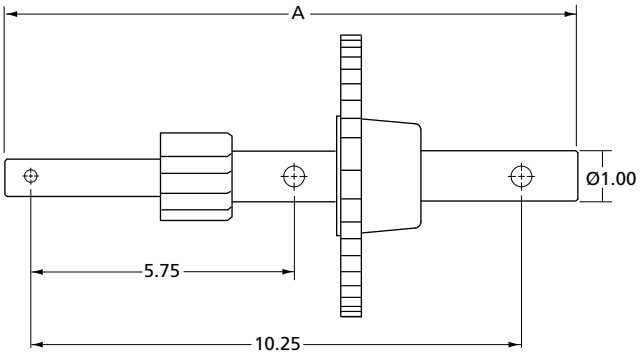

 Amendments and errors reserved. © SAF-HOLLAND, Inc.

THIS PAGE INTENTIONALLY LEFT BLANK

XL-LG11389PM-en-US Rev F 08-2014 Amendments and errors reserved. © SAF-HOLLAND, Inc.

HOLLAND LANDING GEAR ACCESSORIES PARTS REFERENCE GUIDE

TABLE OF CONTENTS

Crank Handles 2-2
Crank Hangers 2-12
Crank Shaft Adapters and Brackets 2-14
Crankshaft Extensions 2-15
Shiftshaft Extensions 2-17
Horn Extension 2-18
Cross Drive Shaft 2-19
Adjustable Cross Drive Shaft 2-19
Sand Shoes 2-20
Sand Shoe Kits 2-29
Center Shoe for Shoe/ Wheel Combination 2-30
Rocker Foot 2-30
Removable Cushion Foot (RCF) 2-31
Cushion Foot Replacement Parts 2-34
Cushion Pad 2-34
Self-Leveling Shoes 2-35
Dolly Jack Shoe (Standard and Removable) 2-36
Hollow Axles 2-38
Hollow Axle Kits 2-39
Solid Axles 2-40
Solid Axle Kits 2-40
Axle Housing 2-41
Wheels 2-42
Wheel /Shoe Combination 2-42
Swivel Casters 2-43
Brace Ears 2-44
Strut Braces 2-53
Installation Kits 2-55
Misc Brackets 2-56

For parts, service, and warranty questions,
call 888.396.6501 or visit www.safholland.us

 Amendments and errors reserved. © SAF-HOLLAND, Inc.

SAF-HOLLAND Group

OEM Universal-Style Crank Handles

Vertical Folding

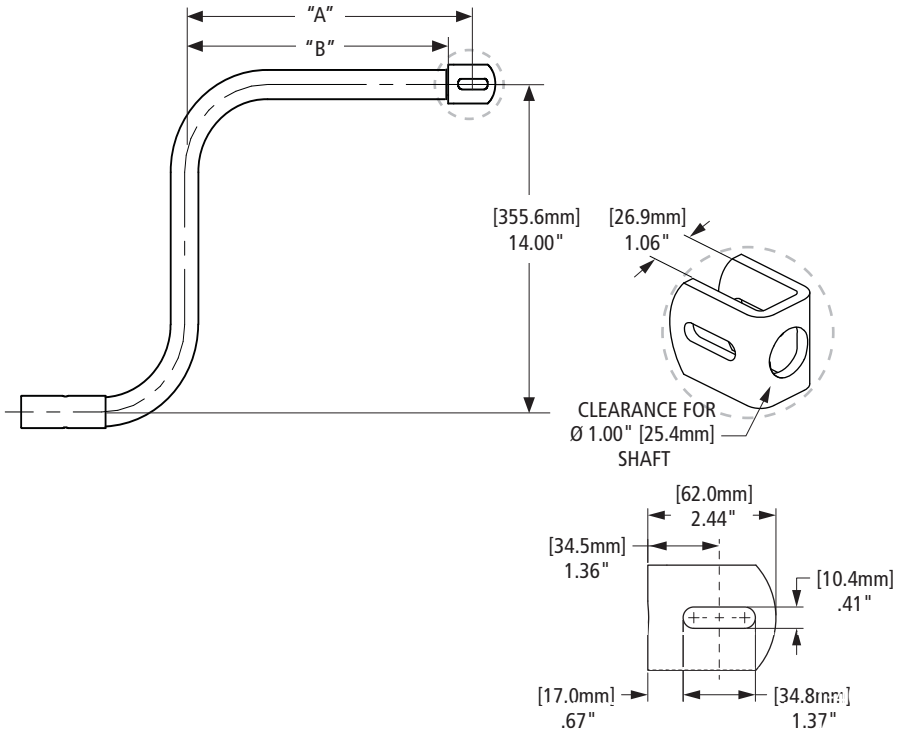

PART NO.	"A" LENGTH [mm]	"B" LENGTH [mm]	WEIGHT LBS. [kg]
LG0083-01	7.49" [190.2]	6.13" [155.7]	2.50 [1.13]
LG0083-07	9.36" [237.7]	8.00" [203.2]	2.70 [1.22]
LG0083-03	13.11" [333.0]	11.75" [298.5]	3.00 [1.36]
LG0083-09	16.86" [428.4]	15.50" [393.7]	3.30 [1.50]
LG0083-05	19.11" [485.4]	17.75" [450.8]	3.50 [1.59]
LG0083-11	22.36" [567.9]	21.00" [533.4]	4.20 [1.90]

Horizontal Folding

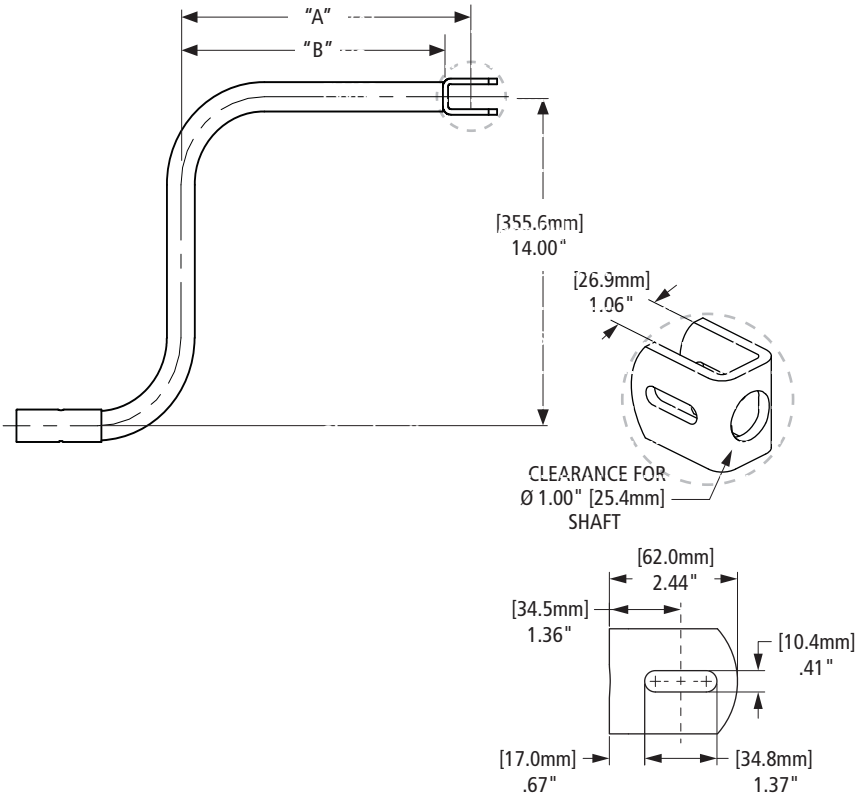

PART NO.	"A" LENGTH [mm]	"B" LENGTH [mm]	WEIGHT LBS. [kg]
LG0083-02	7.49" [190.2]	6.13" [155.7]	2.50 [1.13]
LG0083-08	9.36" [237.7]	8.00" [203.2]	2.70 [1.22]
LG0083-04	13.11" [333.0]	11.75" [298.5]	3.00 [1.36]
LG0083-10	16.86" [428.2]	15.50" [393.7]	3.30 [1.50]
LG0083-06	19.11" [485.3]	17.75" [450.9]	3.50 [1.59]
LG0083-12	22.36" [567.9]	21.00" [533.4]	4.20 [1.90]
LG0083-02-GPC-PK	7.49" [190.2]	6.13" [155.7]	2.50 [1.13]
LG0083-02-GREY-PC	7.49" [190.2]	6.13" [155.7]	2.50 [1.13]

XL-AM10013PM-en-US Rev F 08-2014 Amendments and errors reserved. © SAF-HOLLAND, Inc.

Aftermarket Universal-Style Crank Handles

Vertical Folding

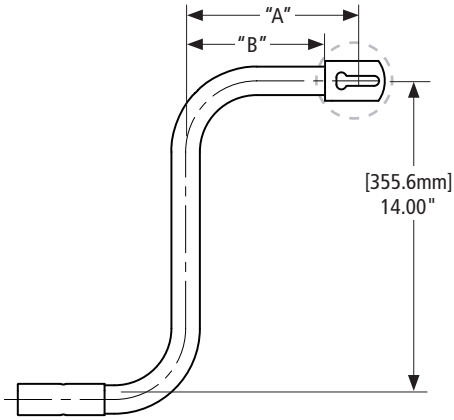

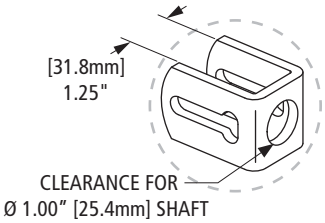

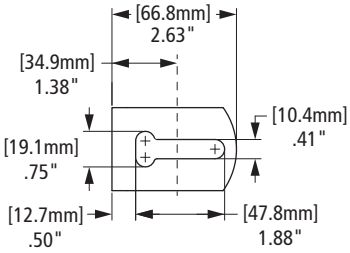

PART NO.	"A" LENGTH [mm]	"B" LENGTH [mm]	WEIGHT LBS. [kg]
50644000	7.45" [189.2]	6.13" [155.7]	2.50 [1.13]
50644006	9.36" [237.7]	8.00" [203.2]	2.70 [1.22]
50644002	13.11" [333.0]	11.75" [298.5]	3.00 [1.36]
50644008	16.86" [428.2]	15.50" [393.7]	3.30 [1.50]
50644004	19.11" [485.4]	17.75" [450.9]	3.50 [1.59]
50644010	22.36" [568.0]	21.00" [533.4]	4.20 [1.90]

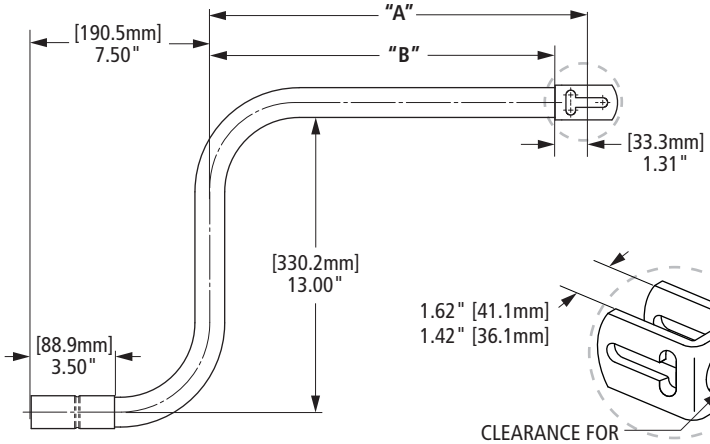

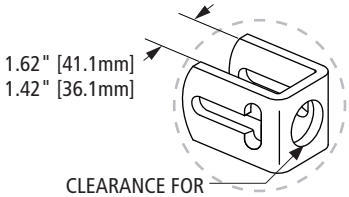

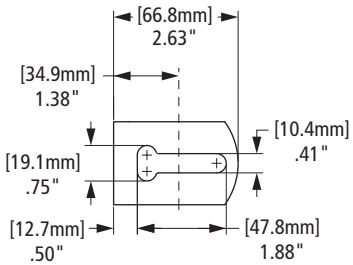

PART NO.	"A" LENGTH [mm]	"B" LENGTH [mm]	WEIGHT LBS. [kg]
50644050	11.00" [279.4]	9.69" [246.1]	3.00 [1.36]
50644051	15.88" [403.5]	14.57" [370.1]	3.50 [1.59]
50644052	21.00" [533.4]	19.69" [500.1]	3.75 [1.70]

 Amendments and errors reserved. © SAF-HOLLAND, Inc.

SAF-HOLLAND Group

Aftermarket Universal-Style Crank Handles

Horizontal Folding

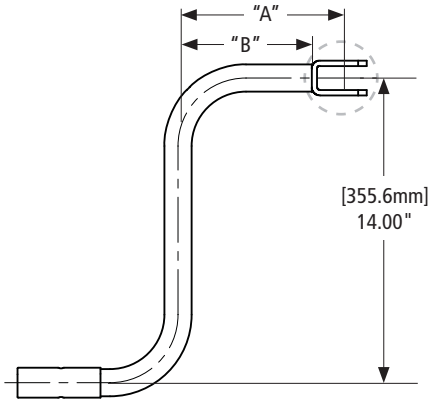

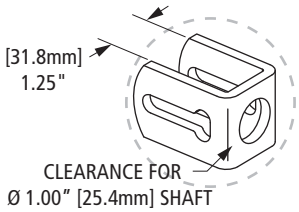

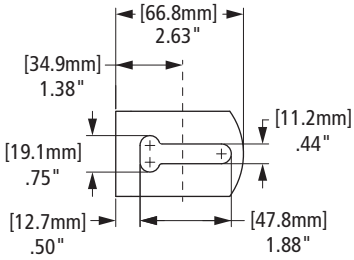

PART NO.	"A" LENGTH [mm]	"B" LENGTH [mm]	WEIGHT LBS. [kg]
50644001	7.49" [190.2]	6.13" [155.7]	2.50 [1.13]
50644007	9.36" [237.7]	8.00" [203.2]	2.70 [1.22]
50644003	13.11" [333.0]	11.75" [298.5]	3.00 [1.36]
50644009	16.86" [428.2]	15.50" [393.7]	3.30 [1.50]
50644005	19.11" [485.4]	17.75" [450.9]	3.50 [1.59]
50644011	22.36" [567.9]	21.00" [533.4]	4.20 [1.90]

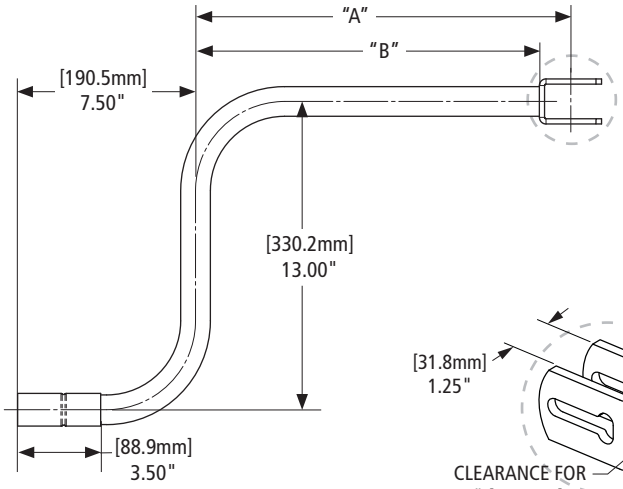

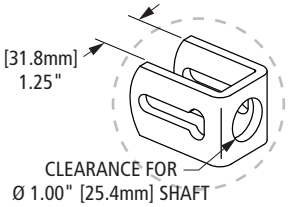

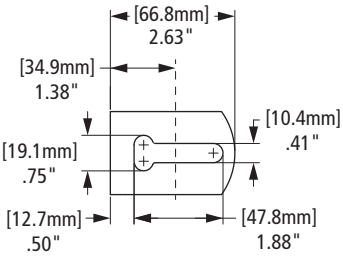

PART NO.	"A" LENGTH [mm]	"B" LENGTH [mm]	WEIGHT LBS. [kg]
50644047	12.00" [304.8]	10.69" [271.6]	3.10 [1.41]
50644048	15.88" [403.4]	14.57" [370.1]	3.50 [1.59]
50644049	21.00" [533.4]	19.69" [500.1]	3.75 [1.70]

XL-AM10013PM-en-US Rev F 08-2014 Amendments and errors reserved. © SAF-HOLLAND, Inc.

OEM Mark V Crank Handles

Vertical Folding

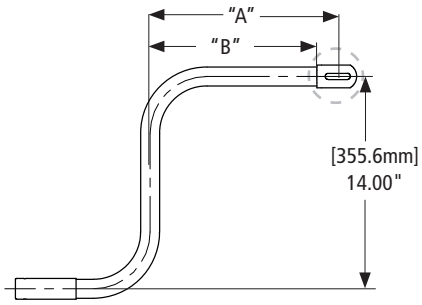

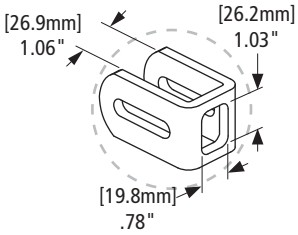

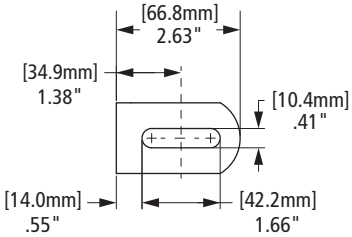

PART NO.	"A" LENGTH [mm]	"B" LENGTH [mm]	WEIGHT LBS. [kg]
XA-V-90-7	5.87" [149.1]	4.50" [114.3]	2.50 [1.13]
XA-V-90-0	9.87" [250.7]	8.50" [215.9]	3.00 [1.36]
XA-V-90-1	9.87" [250.7]	8.50" [215.9]	3.10 [1.41]
XA-V-90-8	11.87" [301.5]	10.50" [266.7]	3.00 [1.36]
XA-V-90-2	12.37" [314.2]	11.00" [279.4]	3.20 [1.45]
XA-V-90-5	15.25" [387.4]	13.88" [352.6]	3.50 [1.59]
XA-V-90-10	17.75" [450.9]	16.38" [416.1]	3.70 [1.68]
XA-V-90-11	19.75" [501.7]	18.38" [466.9]	3.90 [1.77]
XA-V-90-12	21.75" [552.5]	20.38" [517.7]	4.10 [1.86]

Horizontal Folding

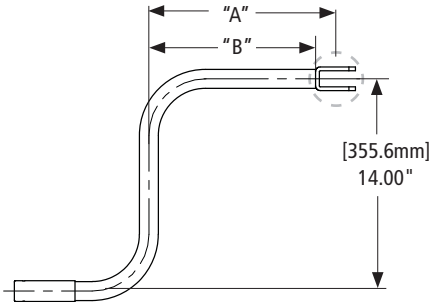

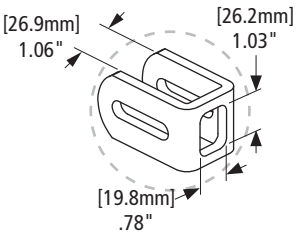

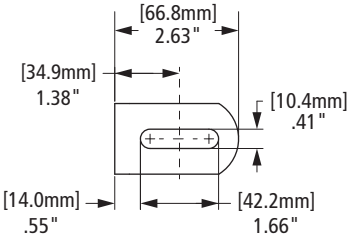

PART NO.	"A" LENGTH [mm]	"B" LENGTH [mm]	WEIGHT LBS. [kg]
XA-V-90-161	5.37" [136.4]	4.00" [101.6]	2.20 [1.00]
XA-V-90-146	7.25" [184.2]	5.88" [149.4]	2.70 [1.22]
XA-V-90-3	9.87" [250.7]	8.50" [215.9]	3.00 [1.36]
XA-V-90-4	12.37" [314.2]	11.00" [279.4]	3.20 [1.45]
XA-V-90-6	15.25" [387.4]	13.88" [352.6]	3.50 [1.59]
XA-V-90-13	17.75" [450.9]	16.38" [416.1]	3.70 [1.68]

 Amendments and errors reserved. © SAF-HOLLAND, Inc.

SAF-HOLLAND Group

Aftermarket Mark V Crank Handles

Vertical Folding

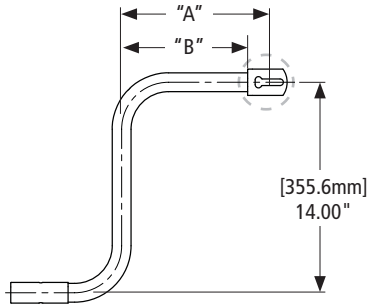

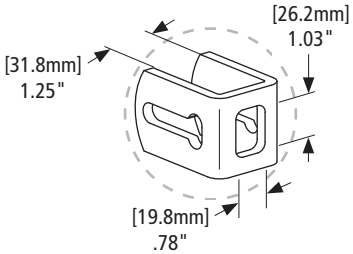

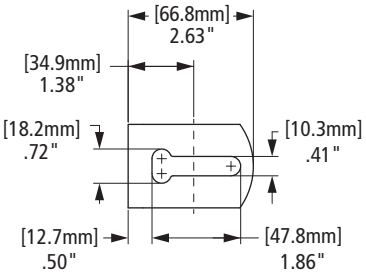

PART NO.	"A" LENGTH [mm]	"B" LENGTH [mm]	WEIGHT LBS. [kg]
50644013	5.70" [144.8]	4.38" [111.3]	2.50 [1.13]
50644015	9.70" [246.4]	8.38" [212.9]	3.00 [1.36]
50644017	12.20" [309.9]	10.88" [276.4]	3.20 [1.45]
50644019	15.07" [382.8]	13.75" [349.3]	3.50 [1.59]
50644021	17.57" [446.3]	16.25" [412.8]	3.70 [1.68]
50644023	21.57" [547.9]	20.25" [514.4]	4.10 [1.86]

Horizontal Folding

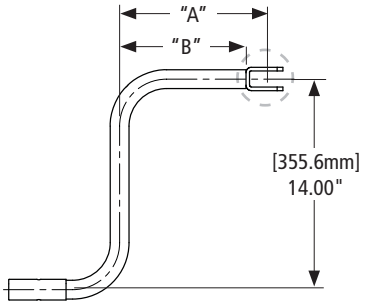

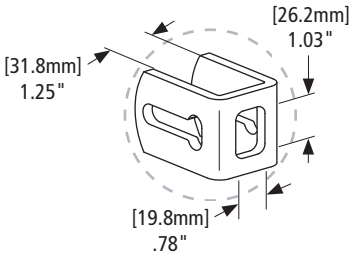

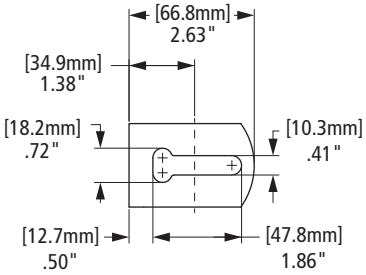

PART NO.	"A" LENGTH [mm]	"B" LENGTH [mm]	WEIGHT LBS. [kg]
50644014	7.07" [179.6]	5.75" [146.1]	2.70 [1.22]
50644016	9.70" [246.4]	8.38" [212.9]	3.00 [1.36]
50644018	12.20" [309.9]	10.88" [276.4]	3.20 [1.45]
50644020	15.07" [382.8]	13.75" [349.3]	3.50 [1.59]
50644022	17.57" [446.3]	16.25" [412.8]	3.70 [1.68]

XL-AM10013PM-en-US Rev F 08-2014 Amendments and errors reserved. © SAF-HOLLAND, Inc.

Easy Bar

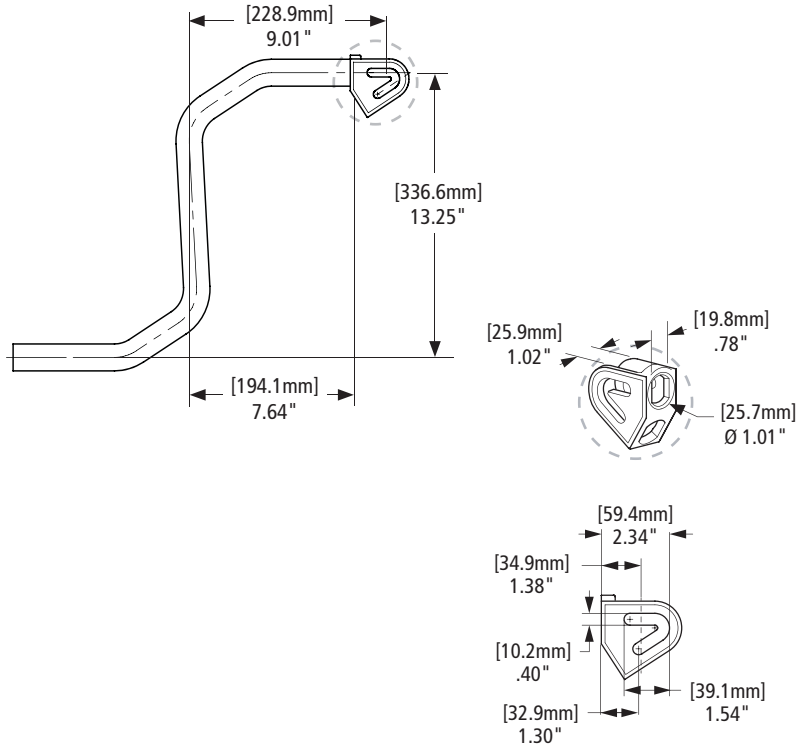

PART NO.	WEIGHT LBS. [kg]
50644036	4.00 [1.81]

Easy Bar Adjustable Adaptor

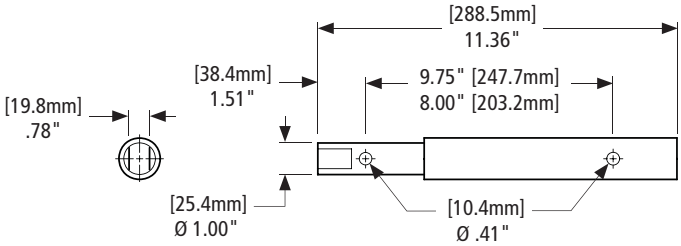

PART NO.	WEIGHT LBS. [kg]
50644037	2.50 [1.13]

 Amendments and errors reserved. © SAF-HOLLAND, Inc.

SAF-HOLLAND Group

Fruehauf-Style Crank Handles

Vertical Folding

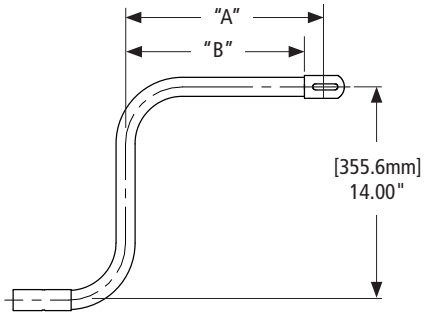

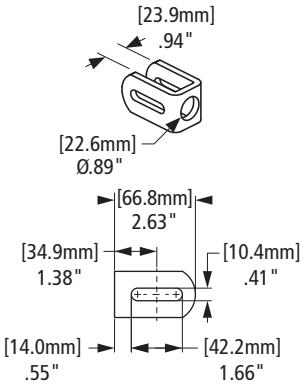

PART NO.	"A" LENGTH [mm]	"B" LENGTH [mm]	WEIGHT LBS. [kg]
LG2130-01	7.49" [190.2]	6.13" [155.7]	2.70 [1.22]
LG2130-07	9.36" [237.7]	8.00" [203.2]	2.90 [1.32]
LG2130-03	13.11" [333.0]	11.75" [298.5]	3.20 [1.45]
LG2130-05	19.11" [485.4]	17.75" [450.9]	3.70 [1.68]
LG2130-09	16.86" [428.2]	15.58" [395.7]	3.50 [1.59]
LG2130-11	22.36" [567.9]	21.00" [533.4]	4.00 [1.81]

Horizontal Folding

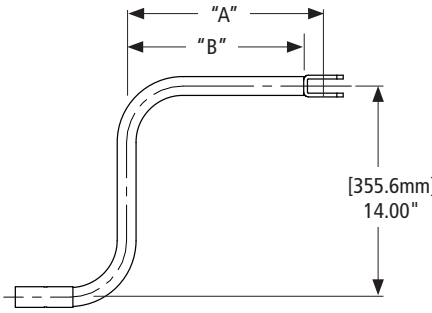

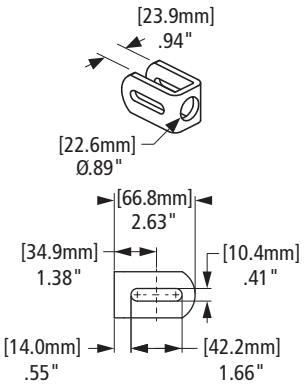

PART NO.	"A" LENGTH [mm]	"B" LENGTH [mm]	WEIGHT LBS. [kg]
LG2130-02	7.49" [190.2]	6.13" [155.7]	2.70 [1.22]
LG2130-08	9.36" [237.7]	8.00" [203.2]	2.90 [1.32]
LG2130-04	13.11" [333.0]	11.75" [298.5]	3.20 [1.45]
LG2130-06	19.11" [485.4]	17.75" [450.9]	3.70 [1.68]

XL-AM10013PM-en-US Rev F 08-2014 Amendments and errors reserved. © SAF-HOLLAND, Inc.

Speed Cranks

Vertical Folding

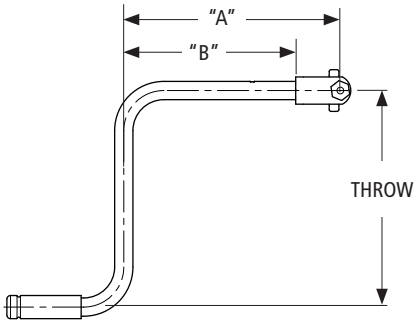

PART NO.	"A" LENGTH [mm]	"B" LENGTH [mm]	THROW [mm]	WEIGHT LBS. [kg]
112021	9.00" [228.6]	6.13" [155.7]	14.00" [355.6]	3.90 [1.77]
112023	14.00" [355.6]	11.13" [282.7]	14.00" [355.6]	4.90 [2.22]
112025	20.00" [508.0]	17.11" [434.6]	14.00" [355.6]	6.10 [2.77]
112130*	8.00" [203.2]	5.13" [130.3]	12.00" [304.8]	3.70 [1.68]

* For 7/8" Shaft

Horizontal Folding

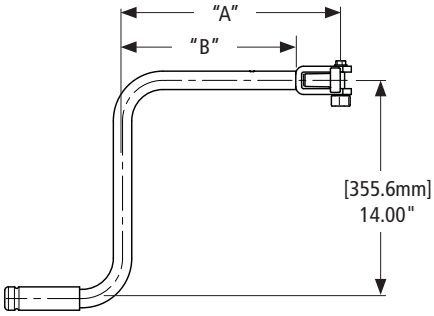

PART NO.	"A" LENGTH [mm]	"B" LENGTH [mm]	WEIGHT LBS. [kg]
112001	9.00" [228.6]	6.13" [155.7]	3.90 [1.77]
112003	14.00" [355.6]	11.13" [282.7]	4.90 [2.22]
112005	20.00" [508.0]	17.11" [434.6]	6.10 [2.77]
112030*	8.00" [203.2]	5.13" [130.3]	3.70 [1.68]

* For 7/8" Shaft

 Amendments and errors reserved. © SAF-HOLLAND, Inc.

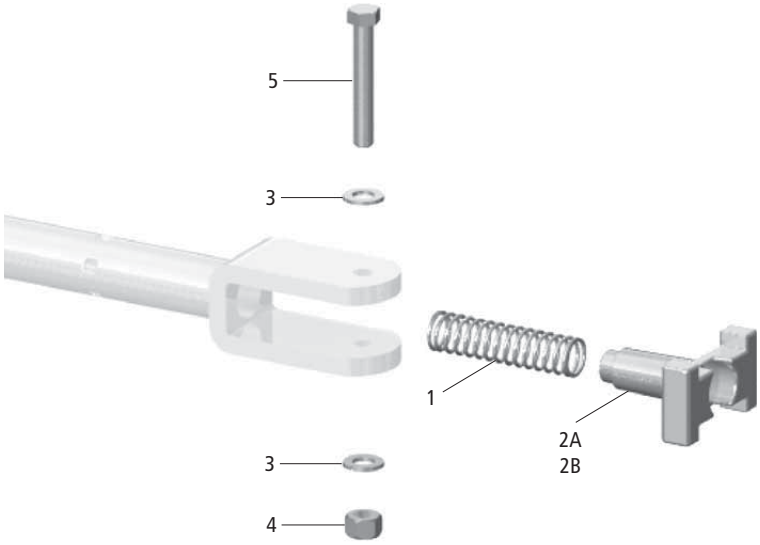

NO.	DESCRIPTION	PART NO.	QTY.	WEIGHT LBS. [kg]
1	Spring	112015	1	0.04 [0.02]
2A	Plunger - for 1" Shaft	112014	1	0.74 [0.34]
2B	Plunger - for .88" Shaft	112034	1	1.75 [0.79]
3	Washer - .38"	XB-PW-016-03	2	0.01 [0.005]
4	Hex Lock Nut - .38"-16	XB-SLN-012-04	1	0.01 [0.005]
5	Hex Head Screw - .38"-16 x 2.50" Lg	201208	1	0.10 [0.04]

Speed Crank Decal - Operating Instructions

Part No. XL-LG375

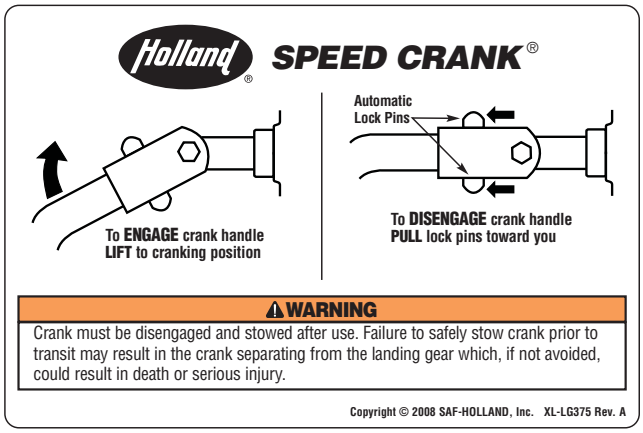

Removable-Style Crank Handle

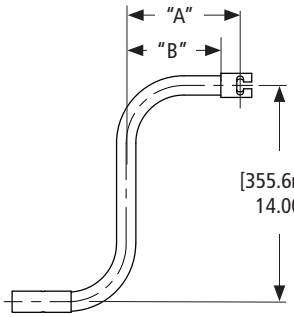

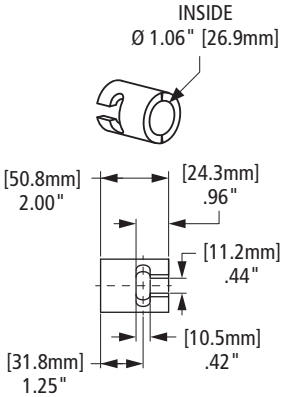

PART NO.	"A" LENGTH [mm]	"B" LENGTH [mm]	WEIGHT LBS. [kg]
50644031	7.38" [187.5]	6.13" [155.7]	2.80 [1.27]
50644032	13.00" [330.2]	11.75" [298.5]	3.30 [1.50]
50644033	19.00" [482.6]	17.75" [450.9]	3.80 [1.72]

NOTE: All kits include handle and pin

Dolly Jack Crank Handles

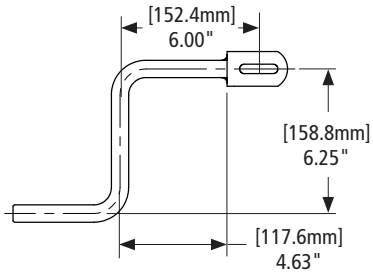

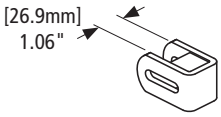

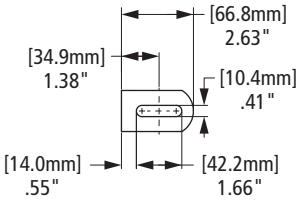

PART NO.	WEIGHT LBS. [kg]
50644034	2.50 [1.13]

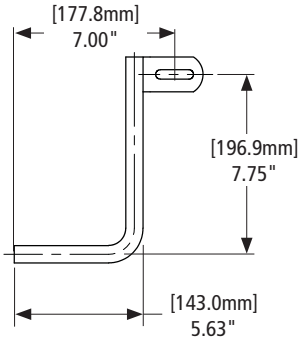

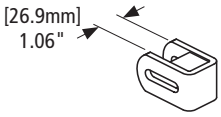

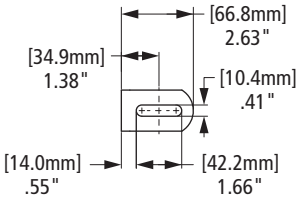

PART NO.	WEIGHT LBS. [kg]
50644035	2.20 [1.00]

 Amendments and errors reserved. © SAF-HOLLAND, Inc.

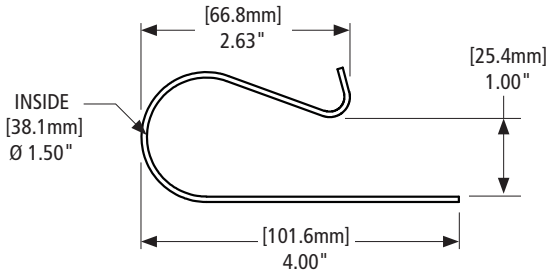

PART NO.	WEIGHT LBS. [kg]
50618000	0.20 [0.09]

* Painted

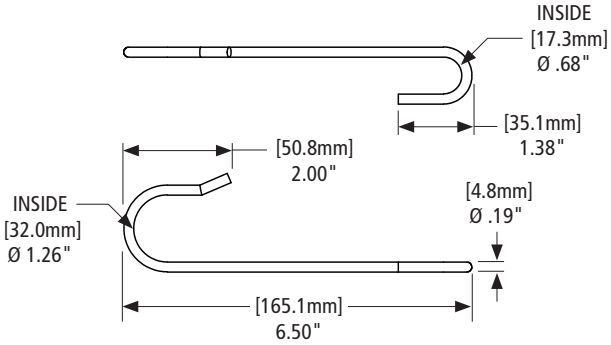

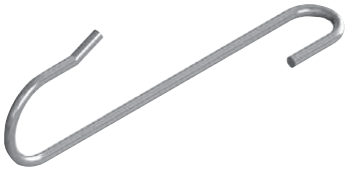

PART NO.	WEIGHT LBS. [kg]
50618001	0.10 [0.05]

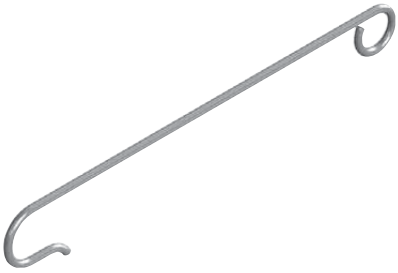

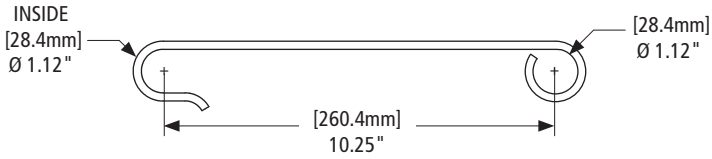

PART NO.	WEIGHT LBS. [kg]
50618002	0.20 Lbs [0.09]

XL-AM10013PM-en-US Rev F 08-2014 Amendments and errors reserved. © SAF-HOLLAND, Inc.

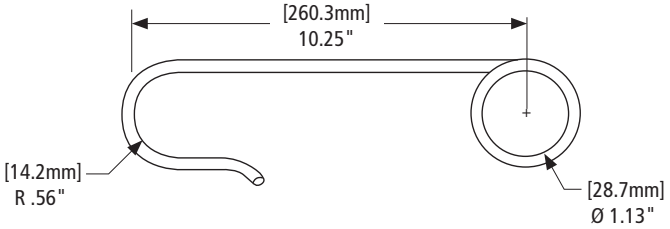

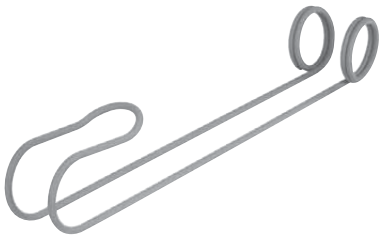

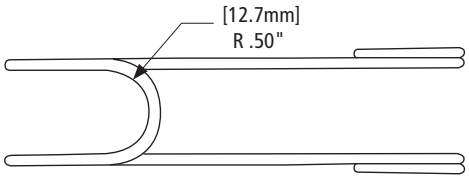

PART NO.	WEIGHT LBS. [kg]
730122	0.10 [0.05]

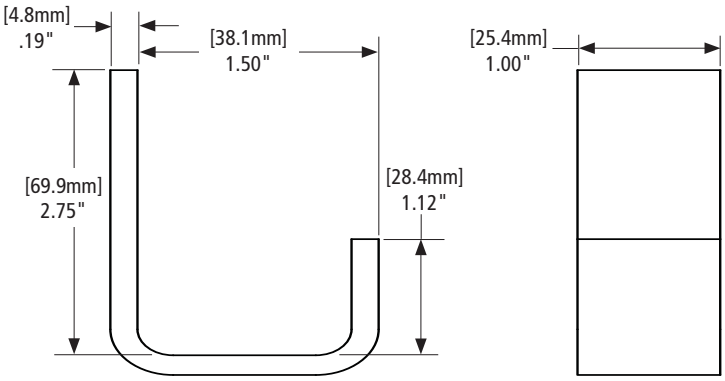

PART NO.	WEIGHT LBS. [kg]
750812	0.30 [0.14]

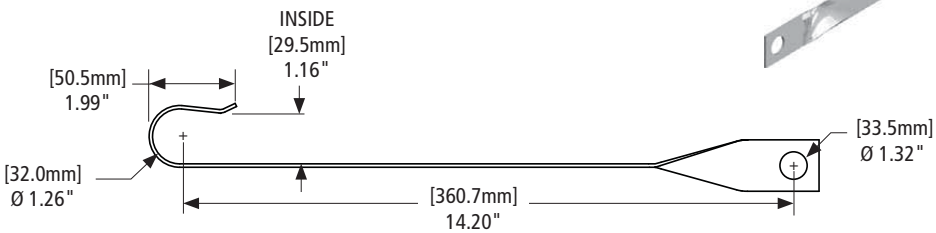

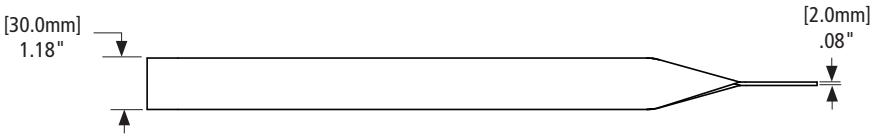

PART NO.	WEIGHT LBS. [kg]
XA-60024	0.50 [0.23]

 Amendments and errors reserved. © SAF-HOLLAND, Inc.

Crank Shaft Adapters

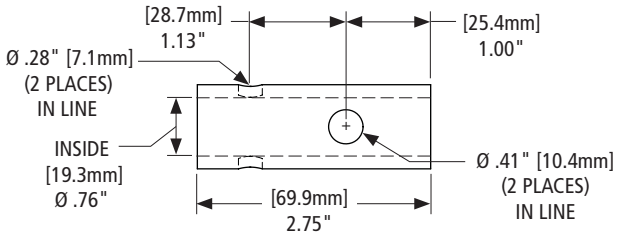

PART NO.	WEIGHT LBS. [kg]
LG0172	0.30 [0.14]

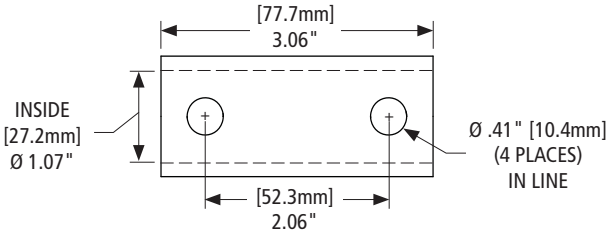

PART NO.	WEIGHT LBS. [kg]
XA-V-630-2	0.40 [0.18]

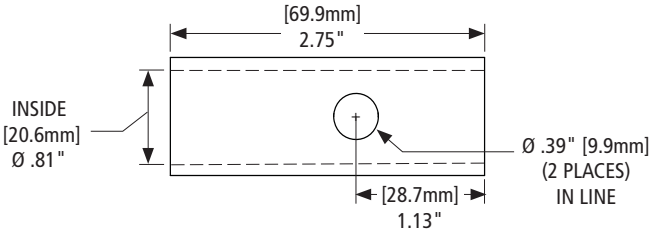

PART NO.	WEIGHT LBS. [kg]
XB-CP4651-16	0.20 [0.09]

Crank Shaft Bracket

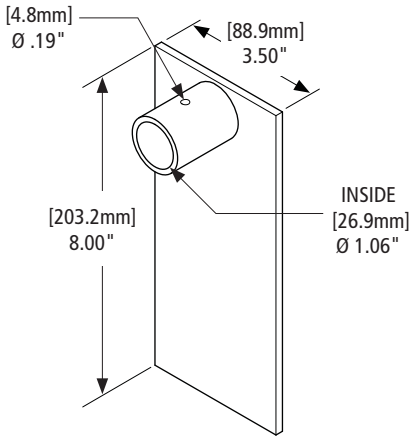

PART NO.	WEIGHT LBS. [kg]
XA-V-971	0.90 [0.41]

XL-AM10013PM-en-US Rev F 08-2014 Amendments and errors reserved. © SAF-HOLLAND, Inc.

Crankshaft Extensions

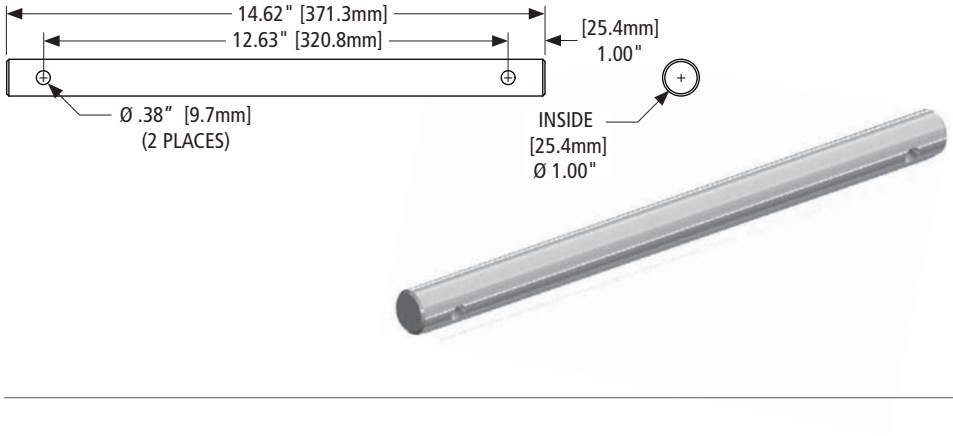

PART NO.	WEIGHT LBS. [kg]
750212	3.20 [1.45]

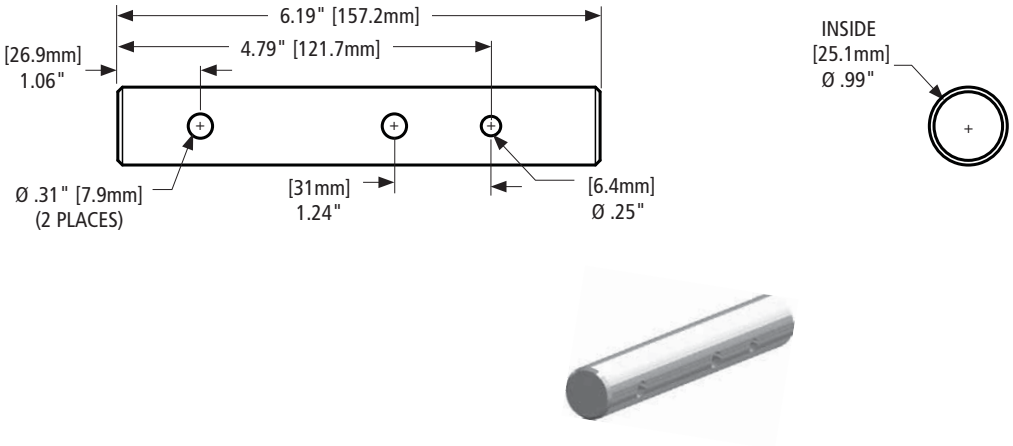

PART NO.	WEIGHT LBS. [kg]
751407	1.29 [0.59]

Crank Extension for 48000

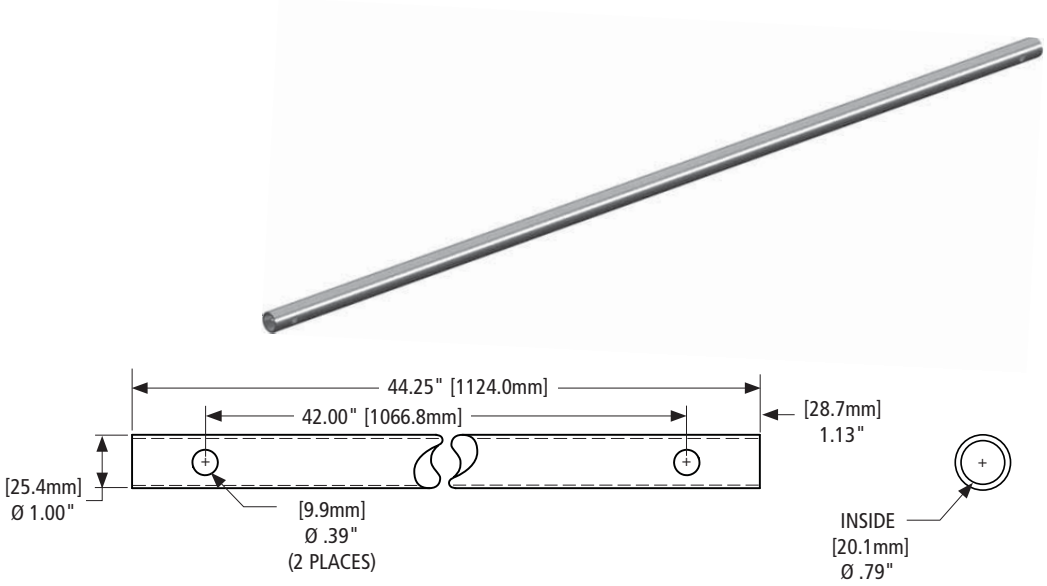

PART NO.	WEIGHT LBS. [kg]
LG2023	3.70 [1.68]

 Amendments and errors reserved. © SAF-HOLLAND, Inc.

SAF-HOLLAND Group

Mark V Extension Bracket Kits

RK-V-1997

PART NO.	ITEM NO. 1	ITEM NO. 1 WEIGHT LBS. [KG]	DIM "A" [mm]	KIT WEIGHT LBS. [KG]
RK-V-1997-1	XA-V-1916	3.45 [1.56]	15.44" [392.2]	5.12 [2.32]
RK-V-1997-2	XA-V-1916-1	1.89 [0.86]	8.94" [227.1]	3.54 [1.61]

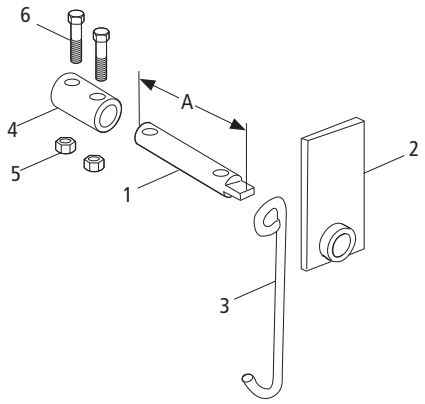

Replacement Parts

NO.	DESCRIPTION	PART NO.	QTY.	WEIGHT LBS. [kg]
1	Extension Shaft	SEE TABLE ABOVE	1	SEE TABLE ABOVE
2	Crankshaft Bracket	XA-V-971	1	1.68 [0.76]
3	Crank Hanger	XB-V-1915	1	0.19 [0.09]
4	Crankshaft Coupling	XA-V-630-2	1	0.40 [0.18]
5	Lock Nut - 3/8"-16	XB-338	2	0.02 [0.01]
6	HHCS - 3/8"-16 x 2.00"	XB-V-444-4	2	0.08 [0.04]

Installation Instructions (Part No. XL-LG303) available at www.safholland.us

RK-V-07602

PART NO.	ITEM NO. 1	ITEM NO. 1 WEIGHT LBS. [KG]	DIM "B" [mm]	KIT WEIGHT LBS. [KG]
RK-V-07602-1	XA-V-1916	3.45 [1.56]	15.44" [392.2]	10.00 [4.54]
RK-V-07602-2	XA-V-1916-1	1.89 [0.86]	8.94" [227.1]	8.20 [3.72]

PART NO.	ITEM NO. 2	ITEM NO. 2 WEIGHT LBS. [KG]	DIM "A" [mm]	KIT WEIGHT LBS. [KG]
RK-V-07602-1	XA-V-07601-1	7.780 [3.53]	15.56" [395.2]	10.00 [4.54]
RK-V-07602-2	XA-V-07601-2	5.810 [2.64]	9.06" [230.1]	8.20 [3.72]

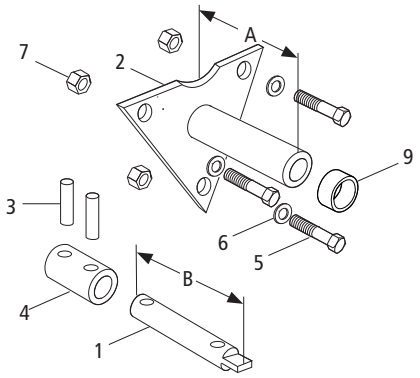

Replacement Parts

NO.	DESCRIPTION	PART NO.	QTY.	WEIGHT LBS. [kg]
1	Extension Shaft	SEE TABLE ABOVE	1	SEE TABLE ABOVE
2	Extension Bracket	SEE TABLE ABOVE	1	SEE TABLE ABOVE
3	Roll Pin .38" Ø x 1.50" Lg.	XB-21-S-375-1500	2	0.02 [0.01]
4	Crank Shaft Coupler	XA-V-630-2	1	0.40 [0.18]
5	HHCS .25"-28 x 3" Lg.	XB-07618	3	0.05 [0.02]
6	Washer	XB-04523	3	0.01 [0.005]
7	Lock Nut .25"-28	XB-3103	3	0.01 [0.005]
9	Bushing (Included in Item 2)	XB-V-851	*	0.01 [0.005]

XL-AM10013PM-en-US Rev F 08-2014 Amendments and errors reserved. © SAF-HOLLAND, Inc.

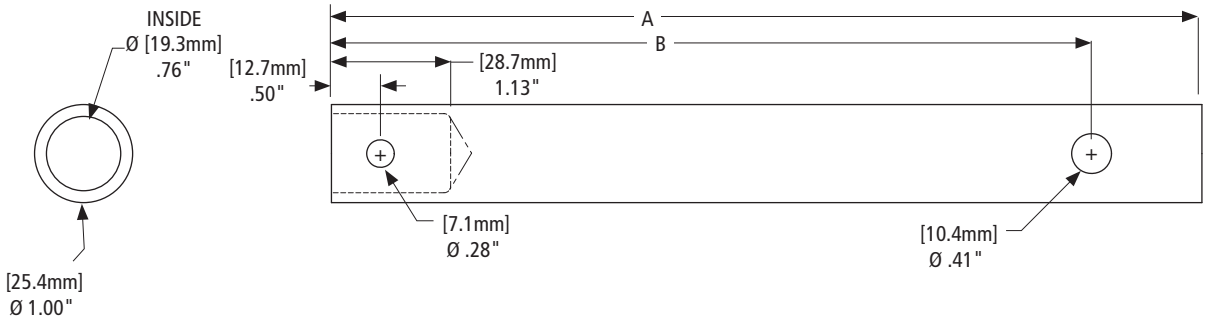

PART NO.	DIM "A" [mm]	DIM "B" [mm]	WEIGHT LBS. [kg]
LG2462	8.88" [225.6]	7.75" [196.9]	1.84 [0.83]
LG2462-01	7.38" [187.5]	6.25" [158.8]	1.50 [0.68]
LG2462-02	13.13" [333.5]	12.00" [304.8]	2.80 [1.27]
LG2462-03	6.38" [162.1]	5.25" [133.4]	1.30 [0.59]

 Amendments and errors reserved. © SAF-HOLLAND, Inc.

SAF-HOLLAND Group

Horn Extension

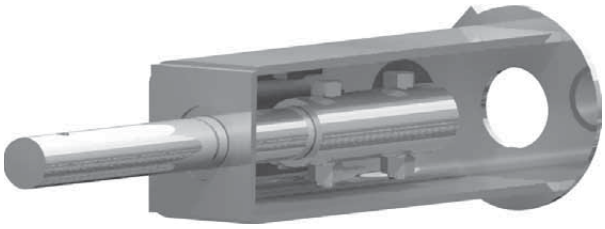

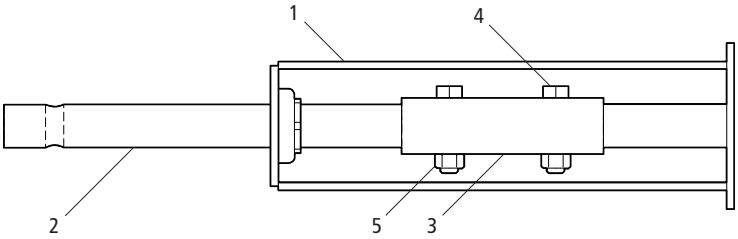

PART NO.	WEIGHT LBS. [kg]
LG0100	10.20 [4.63]

Replacement Parts

NO.	DESCRIPTION	PART NO.	QTY.	WEIGHT LBS. [kg]
1	Horn Assembly	LG0216	1	4.49 [2.04]
2	Drive Shaft	LG0222-01	1	2.38 [1.08]
3	Sleeve	LG0223	1	0.61 [0.28]
4	Hex Cap Screw - 3/8”-16 x 1-3/4” GR5	XB-HHC-050-87	2	0.06 [0.03]
5	Self Locking Nut - 3/8”-16, Zinc Plate	XB-SLN-012-04	2	0.01 [0.005]

XL-AM10013PM-en-US Rev F 08-2014 Amendments and errors reserved. © SAF-HOLLAND, Inc.

Cross Drive Shaft

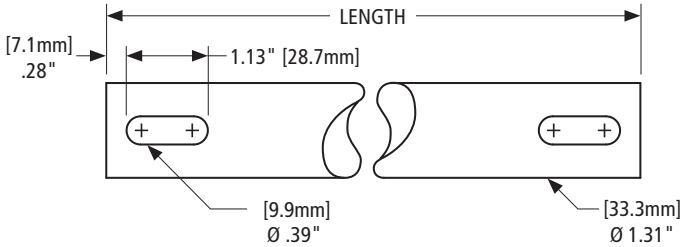

Cross Drive Tube Length Formula

Subtract the number below from the mounting distance to determine the proper cross drive tube length.

MOUNT	MOUNTED CONVENTIONAL [mm]	MOUNTED REVERSE [mm]
Universal	7.313" [185.75]	17.125" [434.98]
I-Beam (6.50" Shaft Dim.)	11.313" [287.35]	-
I-Beam (10" Shaft Dim.)	18.313" [465.15]	-
Top	12.750" [323.85]	11.750" [298.45]

PART NO.	LENGTH [mm]	NO. SLOTS	WEIGHT LBS. [kg]
*LG0094-#	*SEE NOTE	2	VARIES
LG0094	68.00" [1727.2]	1	9.30 [4.22]

* The number following the dash represents the Length (in.) in 2 place decimal form. For part number, remove # and insert numbers after dash. Length should be rounded off to the nearest .50" Example: If the length is 33.00", the part number would be LG0094-**3300**.

Part numbers may also have a non-numeric suffix. Example: LG0094-6400-**P** "-P" indicates paint

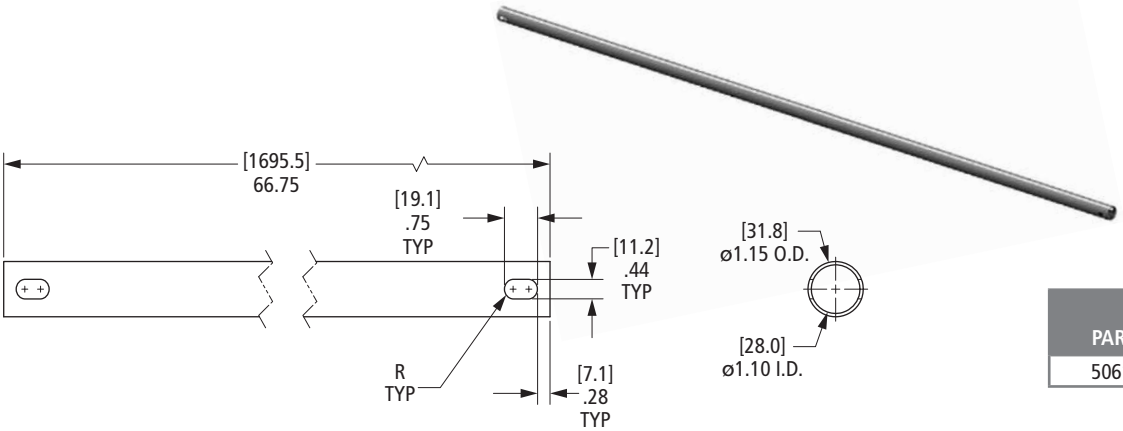

PART NO.	WEIGHT LBS. [kg]
50618046	5.20 [2.36]

Adjustable Cross Drive Shaft

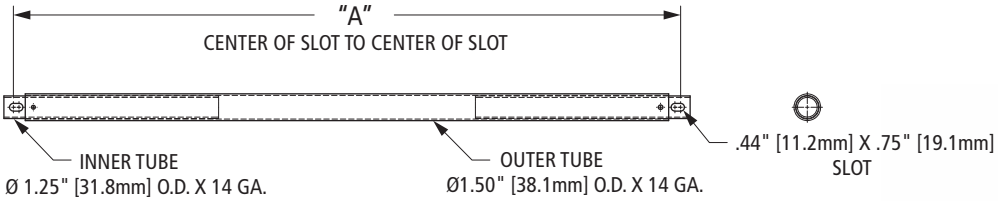

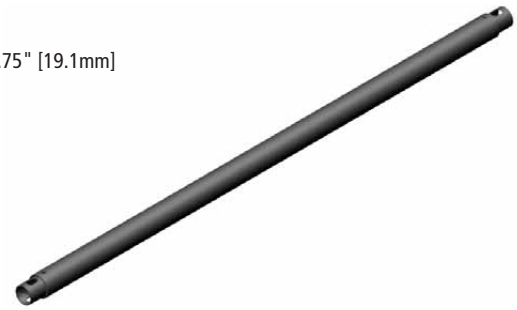

PART NO.	DIM "A" [mm]	WEIGHT LBS. [kg]
50618004	37.00" [939.8] X 56.00" [1422.4]	5.91 [2.68]
50618005	53.00" [1346.2] X 72.00" [1828.8]	7.67 [3.48]

 Amendments and errors reserved. © SAF-HOLLAND, Inc.

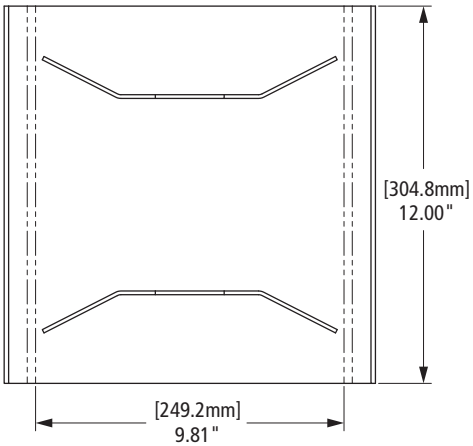

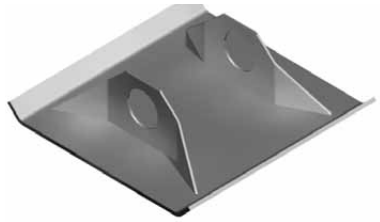

PART NO.	SIDE THICKNESS	BASE THICKNESS	WEIGHT LBS. [kg]
50616007	.12"[3.0mm]	.2" [5.1mm]	12.10 [5.49]

NO GUSSET

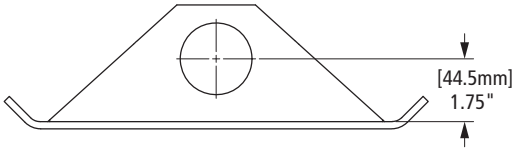

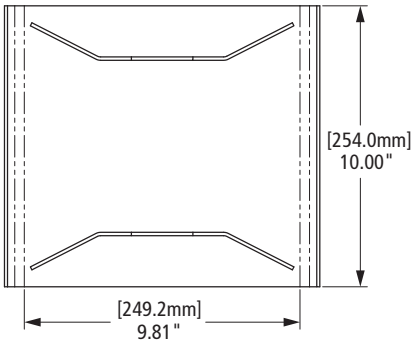

PART NO.	SIDE THICKNESS	BASE THICKNESS	WEIGHT LBS. [kg]
50616008	.12"[3.0mm]	.12" [3.0mm]	8.10 [3.67]

NO GUSSET

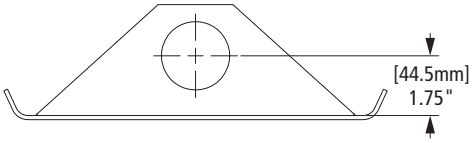

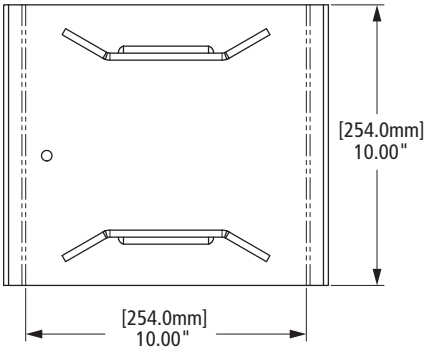

PART NO.	PATCH	SIDE THICKNESS	BASE THICKNESS	WEIGHT LBS. [kg]
50616034	.25" [6.4]	.25"[6.5mm]	.25" [6.4mm]	11.9 [5.4]

NO GUSSET
SUB FOR: PENZ# 05-311
BUFFERS# 1001-1537

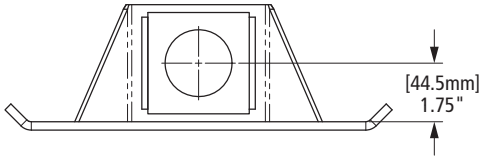

XL-AM10013PM-en-US Rev F 08-2014 Amendments and errors reserved. © SAF-HOLLAND, Inc.

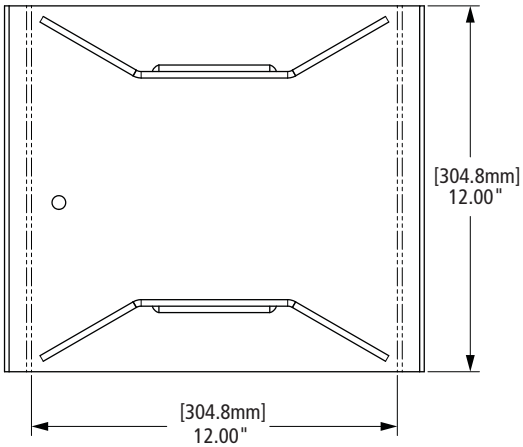

PART NO.	PATCH	SIDE THICKNESS	BASE THICKNESS	WEIGHT LBS. [kg]
50616035	.25" [6.4mm]	.25"[6.4mm]	.25" [6.4mm]	15.32 [6.95]

NO GUSSET
SUB FOR: PENZ# 05-336

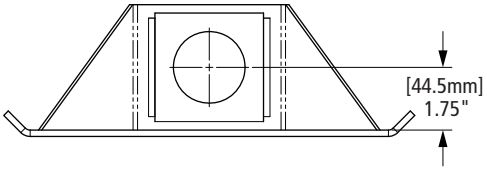

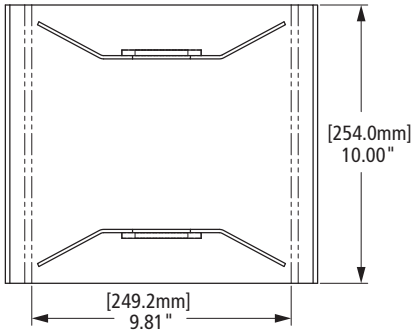

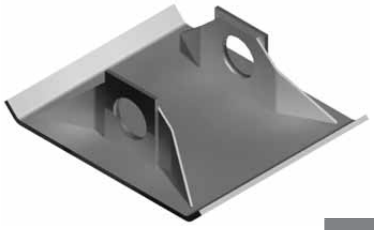

PART NO.	PATCH	SIDE THICKNESS	BASE THICKNESS	WEIGHT LBS. [kg]
LG0056-02	.2" [5.1mm]	.12"[3.0mm]	.24" [6.1mm]	12.16 [5.52]

NO GUSSET

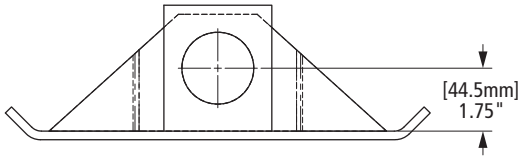

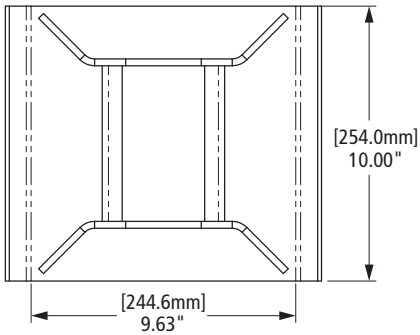

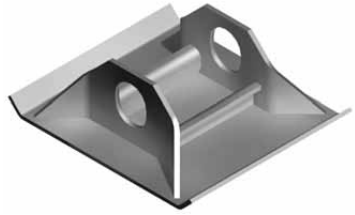

PART NO.	SIDE THICKNESS	BASE THICKNESS	WEIGHT LBS. [kg]
XA-04681	.25"[6.4mm]	.2" [5.1mm]	10.10 [4.58]

DOUBLE GUSSET

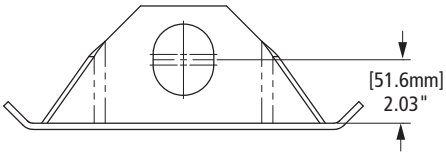

 Amendments and errors reserved. © SAF-HOLLAND, Inc.

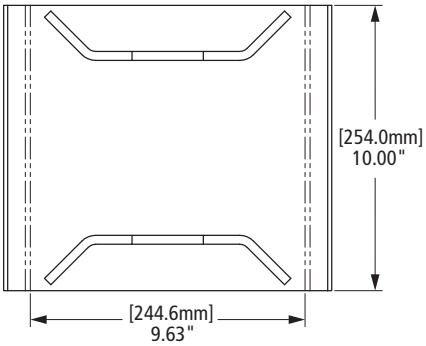

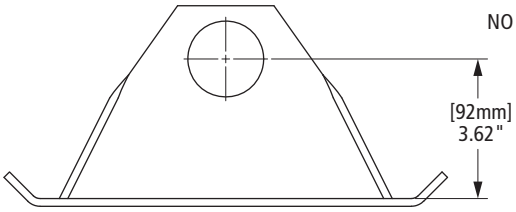

PART NO.	SIDE THICKNESS	BASE THICKNESS	WEIGHT LBS. [kg]
50616006	.31"[7.9mm]	.2" [5.1mm]	12.00 [5.44]

NO GUSSET

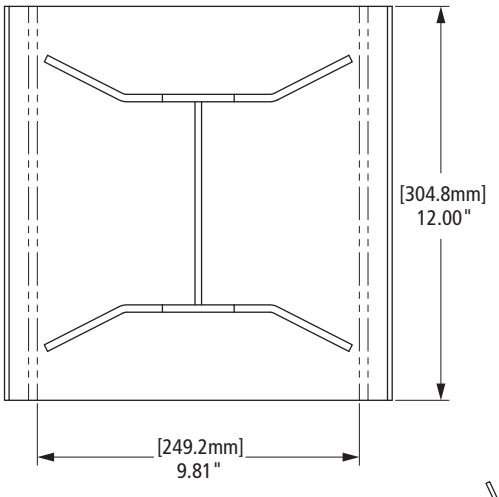

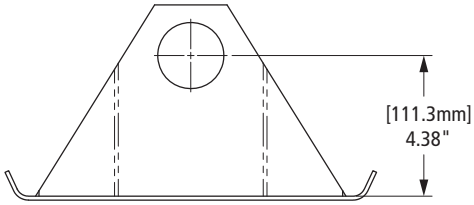

PART NO.	SIDE THICKNESS	BASE THICKNESS	WEIGHT LBS. [kg]
50616000	.23"[5.8mm]	.2" [5.1mm]	14.90 [6.76]

SINGLE GUSSET

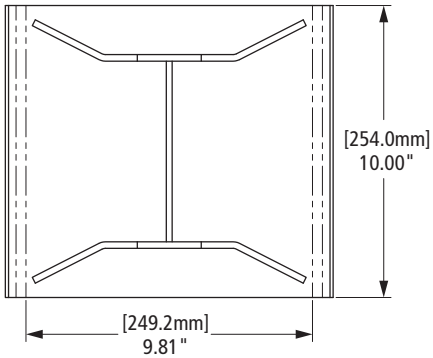

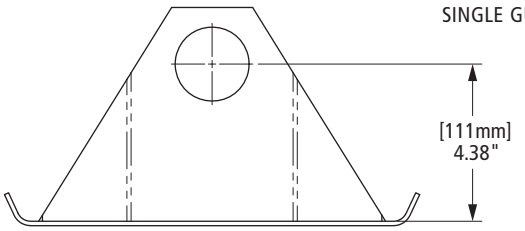

PART NO.	SIDE THICKNESS	BASE THICKNESS	WEIGHT LBS. [kg]
50616001	.23"[5.8mm]	.12" [3mm]	10.90 [4.94]

SINGLE GUSSET

XL-AM10013PM-en-US Rev F 08-2014 Amendments and errors reserved. © SAF-HOLLAND, Inc.

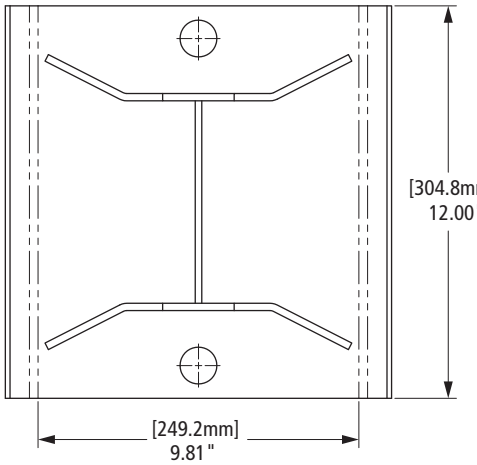

PART NO.	SIDE THICKNESS	BASE THICKNESS	WEIGHT LBS. [kg]
LG0050-01	.23"[5.8mm]	.2" [5.1mm]	14.90 [6.76]

SINGLE GUSSET

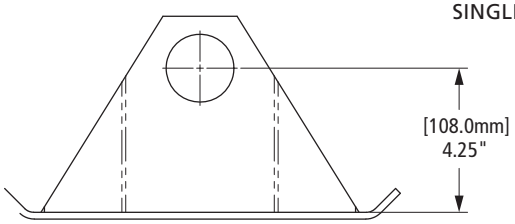

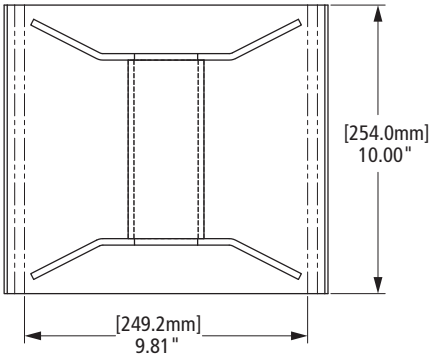

PART NO.	SIDE THICKNESS	BASE THICKNESS	WEIGHT LBS. [kg]
LG0055-01	.23"[5.8mm]	.12" [3mm]	12.60 [5.72]

TUNNEL GUSSET

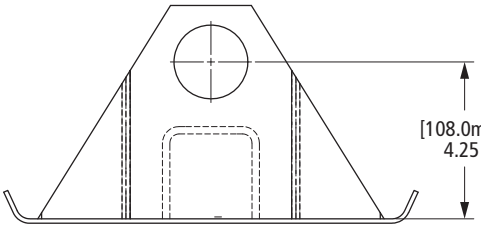

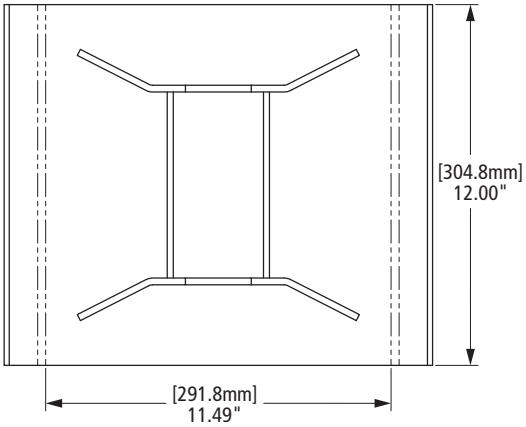

PART NO.	SIDE THICKNESS	BASE THICKNESS	WEIGHT LBS. [kg]
LG0065-03	.23"[5.8mm]	.24" [6.1mm]	18.10 [8.21]

DOUBLE GUSSET

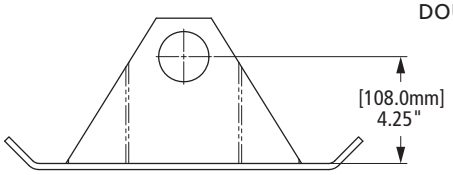

 Amendments and errors reserved. © SAF-HOLLAND, Inc.

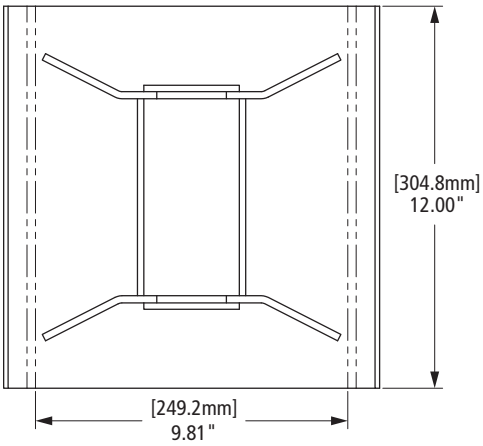

PART NO.	PATCHES	SIDE THICKNESS	BASE THICKNESS	WEIGHT LBS. [kg]
50616012	.2"[5.1mm]	.23"[5.8mm]	.2" [5.1mm]	17.50 [7.94]

DOUBLE GUSSET

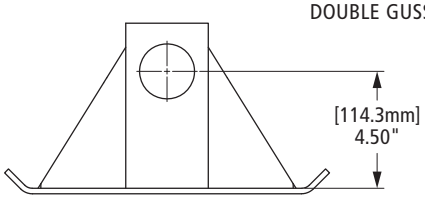

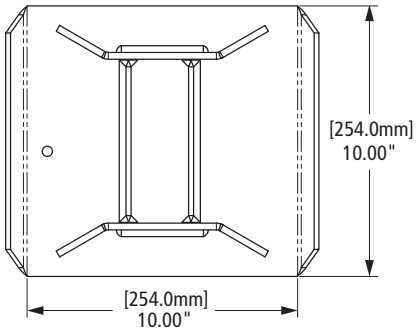

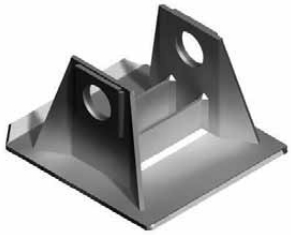

PART NO.	PATCHES	SIDE THICKNESS	BASE THICKNESS	WEIGHT LBS. [kg]
50616036	.25"[6.4mm]	.25"[6.4mm]	.25" [6.4mm]	17.5 [7.9]

DOUBLE GUSSET
SUB FOR:
PENZ# 05-318
BUFFERS# 1001-2035

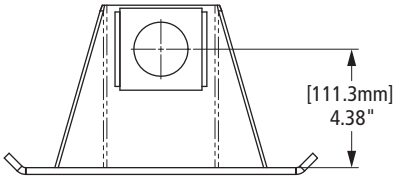

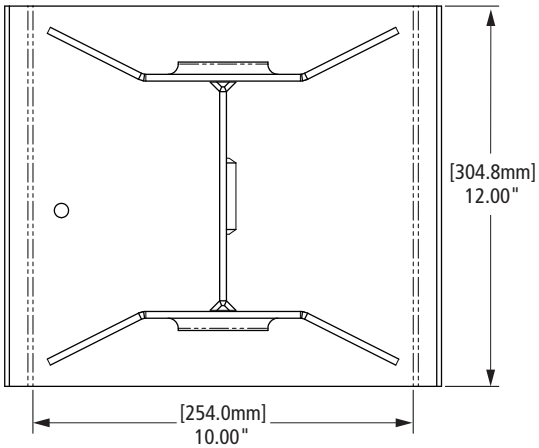

PART NO.	SIDE THICKNESS	BASE THICKNESS	WEIGHT LBS. [kg]
50616039	.25"[6.4mm]	.25" [6.4mm]	15.80 [7.17]

SINGLE GUSSET
FLARED HOLE

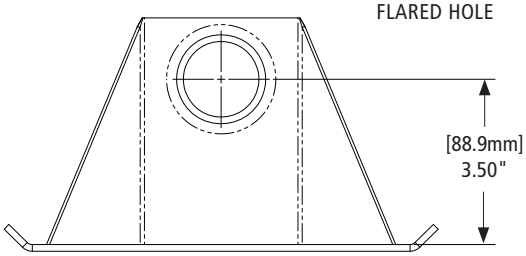

XL-AM10013PM-en-US Rev F 08-2014 Amendments and errors reserved. © SAF-HOLLAND, Inc.

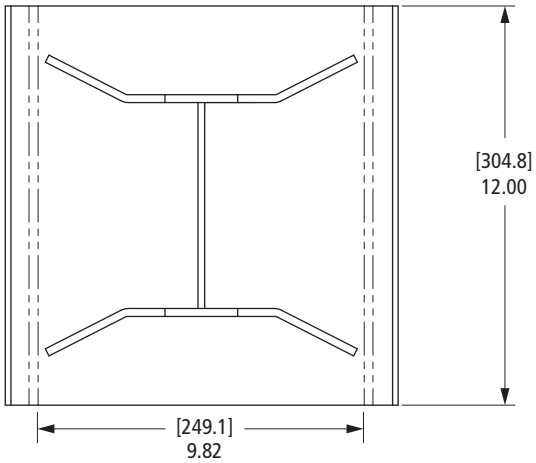

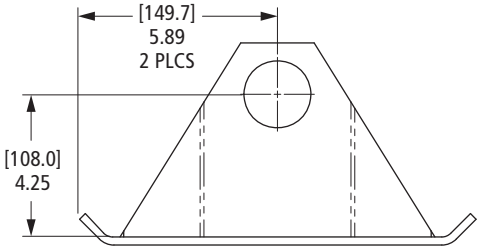

PART NO.	SIDE THICKNESS	BASE THICKNESS	WEIGHT LBS. [kg]
LG0050	.22"[5.6]	.20"[5.1]	14.90 [6.76]

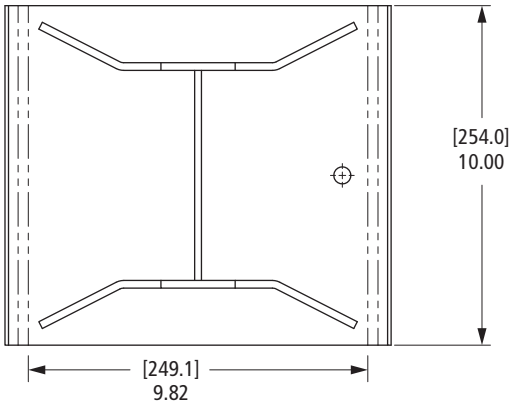

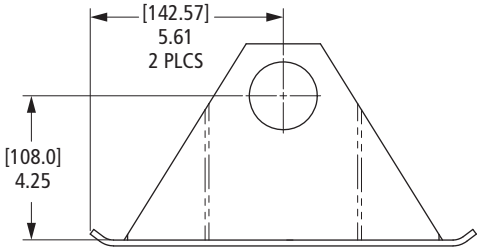

PART NO.	SIDE THICKNESS	BASE THICKNESS	WEIGHT LBS. [kg]
LG0055	.25"[6.4mm]	.12"[3.0mm]	8.80 [4.00]

 Amendments and errors reserved. © SAF-HOLLAND, Inc.

SAF-HOLLAND Group

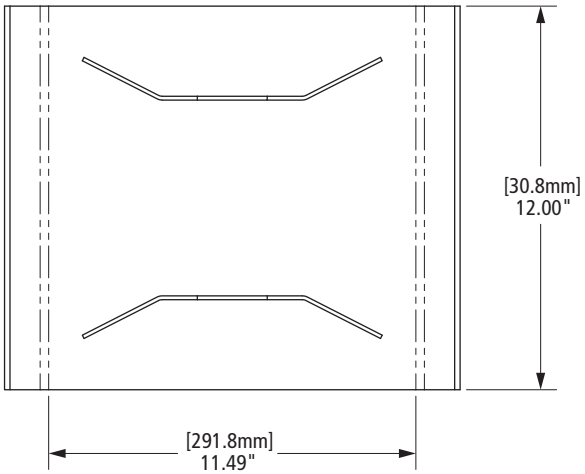

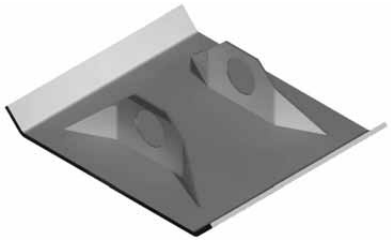

PART NO.	SIDE THICKNESS	BASE THICKNESS	WEIGHT LBS. [kg]
50616009	.12"[3.0mm]	.24" [6.1mm]	14.30 [6.49]

NO GUSSET

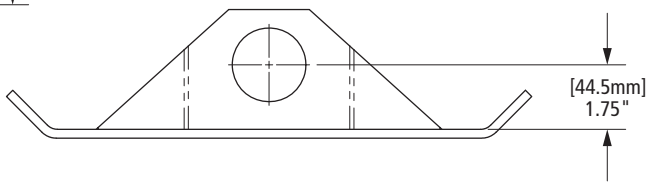

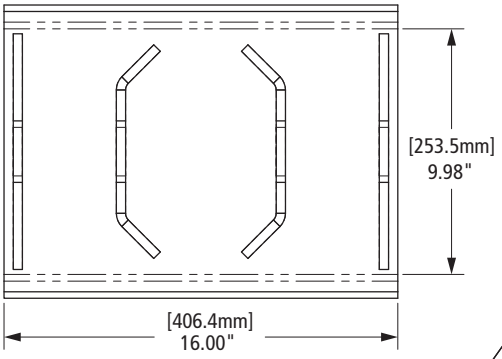

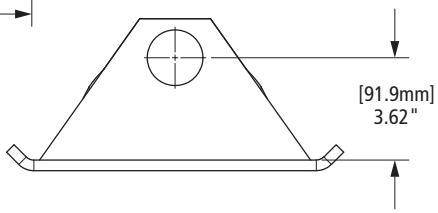

PART NO.	SIDE THICKNESS	BASE THICKNESS	WEIGHT LBS. [kg]
50616015	.38"[9.7mm]	.38" [9.7mm]	22.00 [9.98]

NO GUSSET

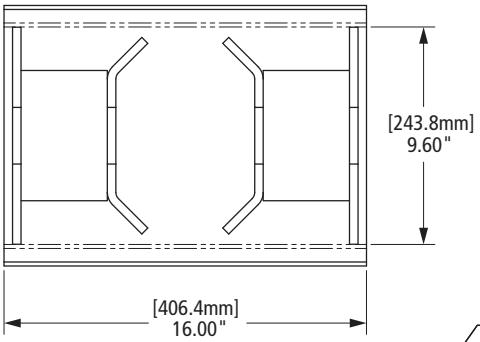

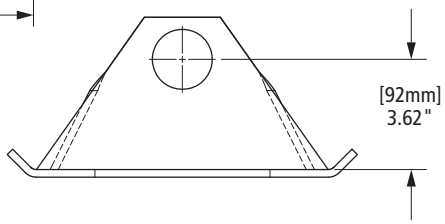

PART NO.	SIDE THICKNESS	BASE THICKNESS	WEIGHT LBS. [kg]
50616016	.38"[9.7mm]	.25" [6.4mm]	22.00 [9.98]

NO GUSSET

XL-AM10013PM-en-US Rev F 08-2014 Amendments and errors reserved. © SAF-HOLLAND, Inc.

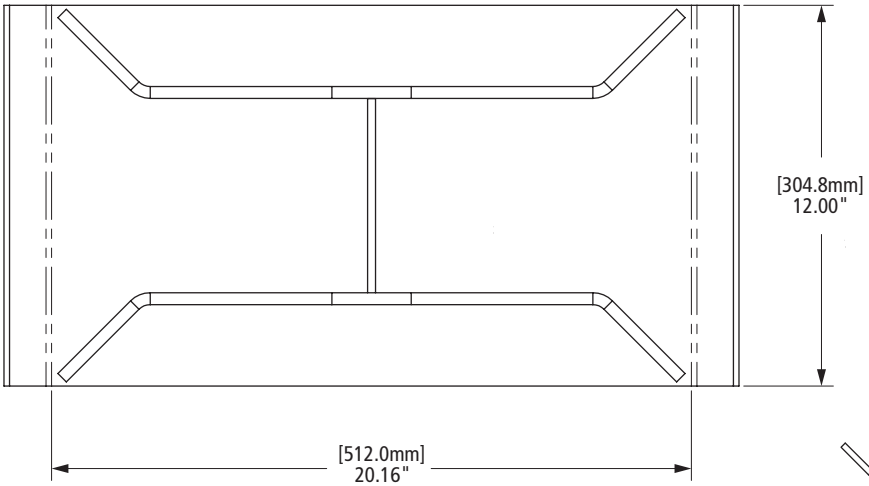

PART NO.	SIDE THICKNESS	BASE THICKNESS	WEIGHT LBS. [kg]
50616002	.38"[9.7mm]	.25" [6.4mm]	27.40 [12.43]

SINGLE GUSSET

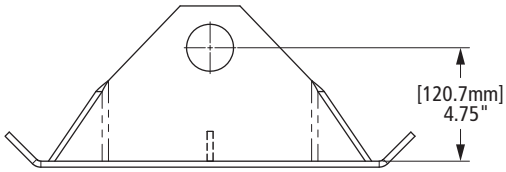

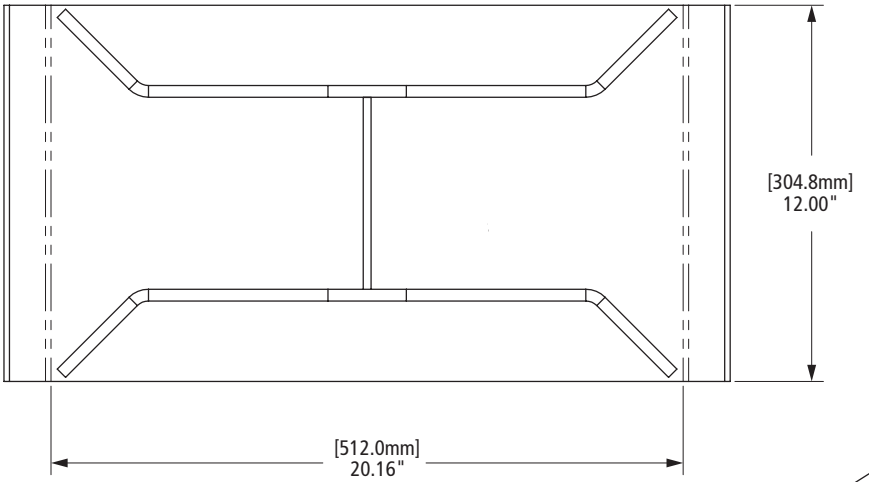

PART NO.	SIDE THICKNESS	BASE THICKNESS	WEIGHT LBS. [kg]
50616003	.38"[9.7mm]	.25" [6.4mm]	35.70 [16.19]

SINGLE GUSSET

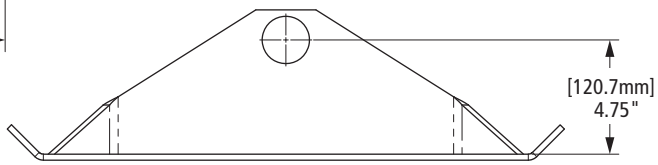

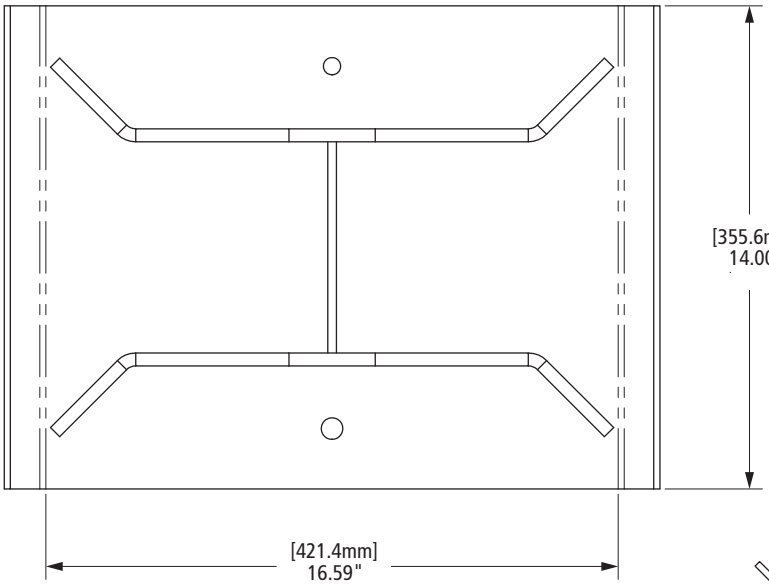

PART NO.	SIDE THICKNESS	BASE THICKNESS	WEIGHT LBS. [kg]
50616004	.38"[9.7mm]	.25" [6.4mm]	21.50 [9.75]

SINGLE GUSSET

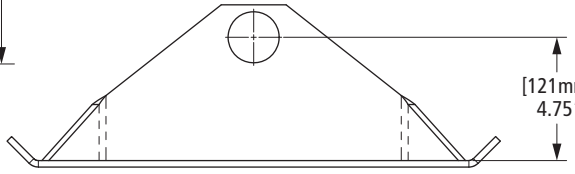

 Amendments and errors reserved. © SAF-HOLLAND, Inc.

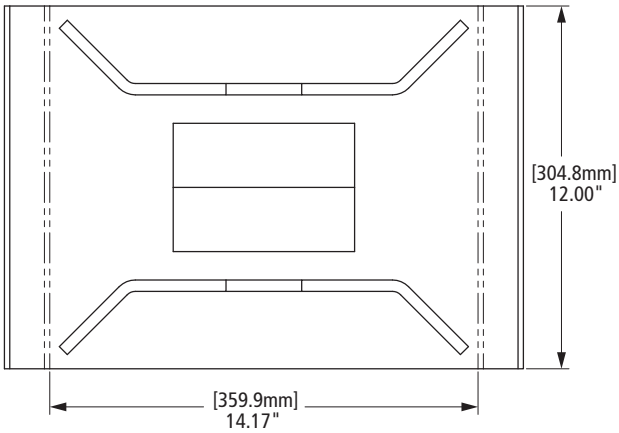

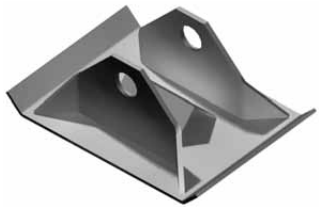

PART NO.	SIDE THICKNESS	BASE THICKNESS	WEIGHT LBS. [kg]
XA-S03010	.38"[9.7mm]	.25" [6.4mm]	29.70 [13.47]

ANGLE GUSSET

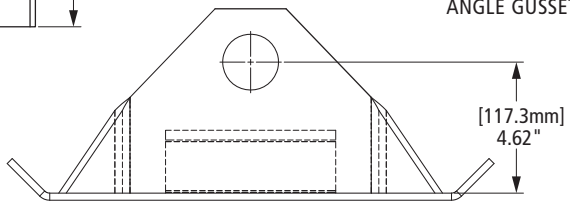

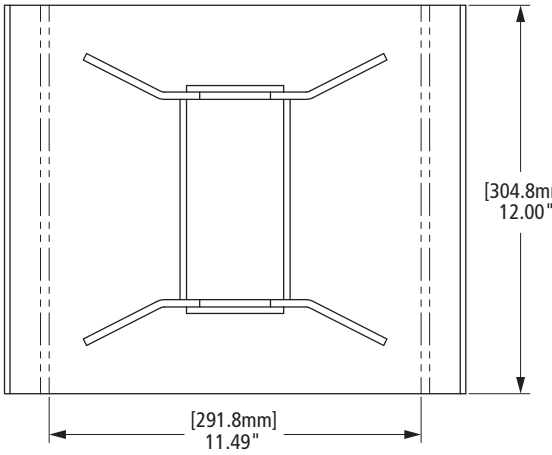

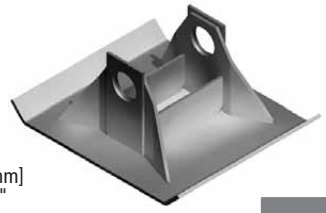

PART NO.	PATCHES	SIDE THICKNESS	BASE THICKNESS	WEIGHT LBS. [kg]
50616013	.2" [5.1mm]	.23" [5.8mm]	.24" [6.1mm]	19.70 [8.94]

DOUBLE GUSSET

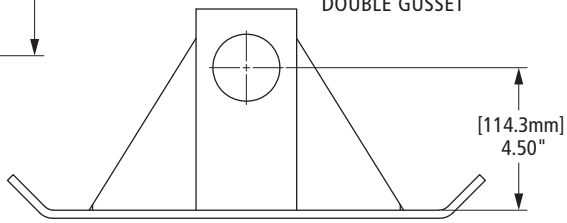

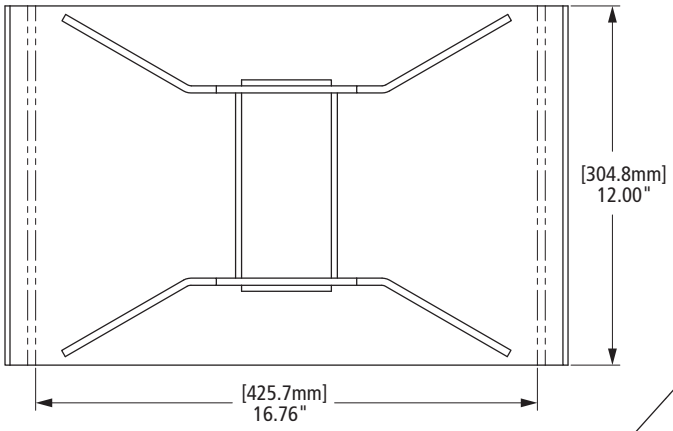

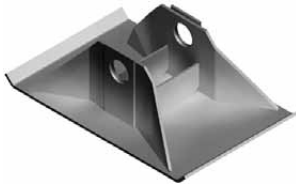

PART NO.	PATCHES	SIDE THICKNESS	BASE THICKNESS	WEIGHT LBS. [kg]
50616014	.2" [5.1mm]	.24" [6.1mm]	.24" [6.1mm]	26.90 [12.20]

DOUBLE GUSSET

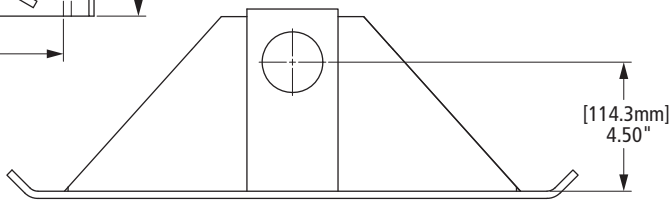

XL-AM10013PM-en-US Rev F 08-2014 Amendments and errors reserved. © SAF-HOLLAND, Inc.

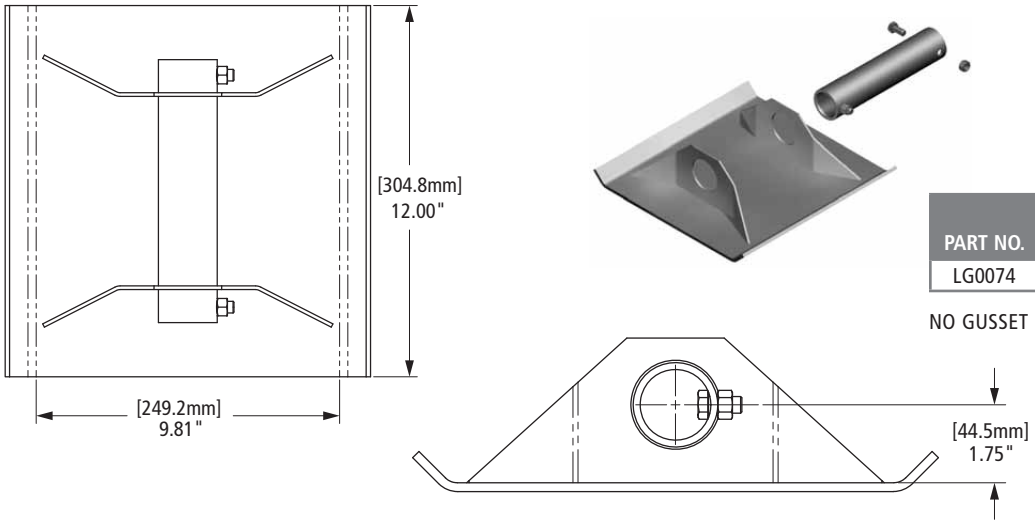

PART NO.	SIDE THICKNESS	BASE THICKNESS	WEIGHT LBS. [kg]
LG0074	.12" [3.0mm]	.2" [5.1mm]	15.50 [7.03]

NO GUSSET

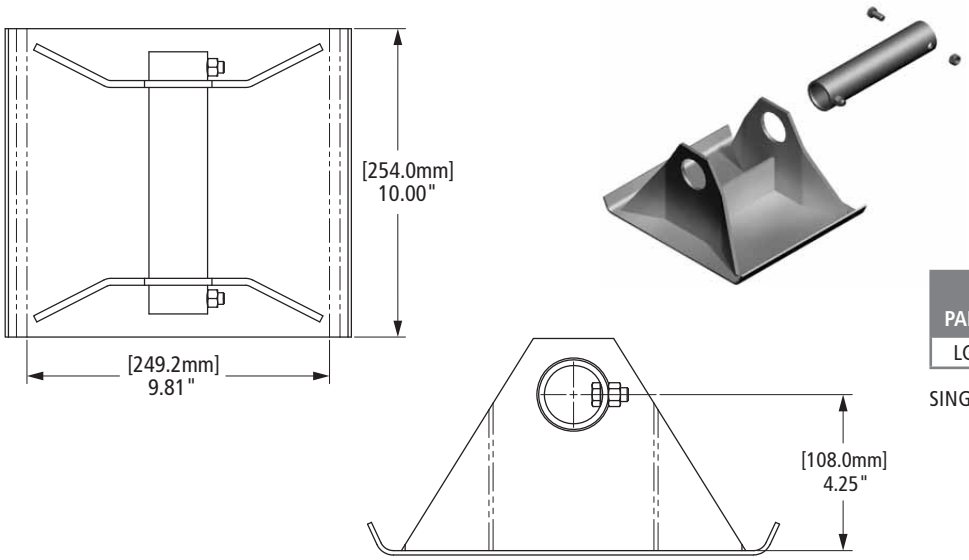

PART NO.	SIDE THICKNESS	BASE THICKNESS	WEIGHT LBS. [kg]
LG0078	.23" [5.8mm]	.12" [3.0mm]	28.60 [12.97]

SINGLE GUSSET

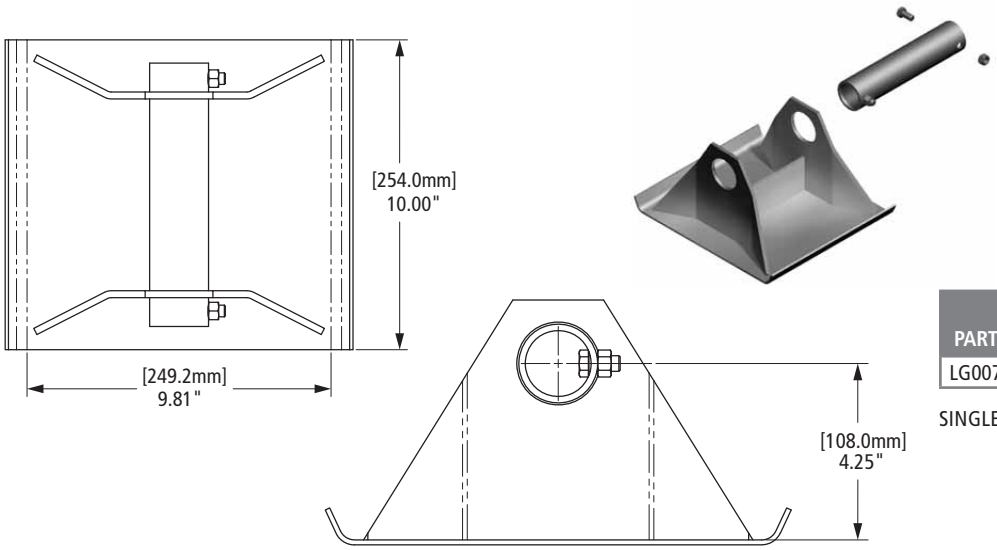

PART NO.	SIDE THICKNESS	BASE THICKNESS	WEIGHT LBS. [kg]
LG0078-01	.23" [5.8mm]	.12" [3.0mm]	14.30 [6.49]

SINGLE GUSSET

 Amendments and errors reserved. © SAF-HOLLAND, Inc.

Center Shoe for Shoe/Wheel Combination

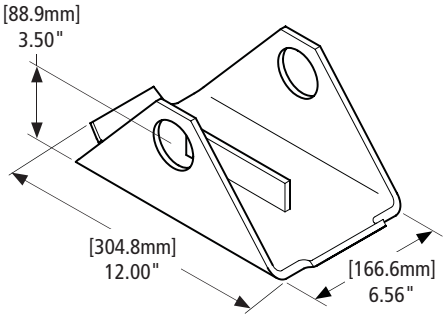

PART NO.	WEIGHT LBS. [kg]
50616017	8.90 [4.04]

Rocker Foot

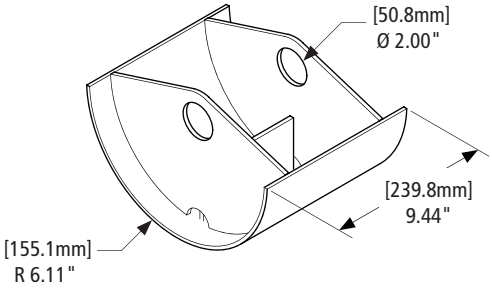

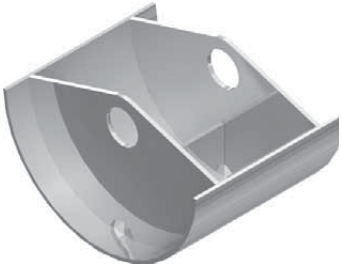

PART NO.	WEIGHT LBS. [kg]
LG0818	19.10 [8.66]

XL-AM10013PM-en-US Rev F 08-2014 Amendments and errors reserved. © SAF-HOLLAND, Inc.

Removable Cushion Foot - Standard

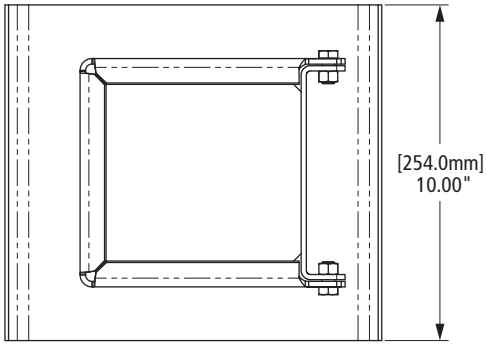

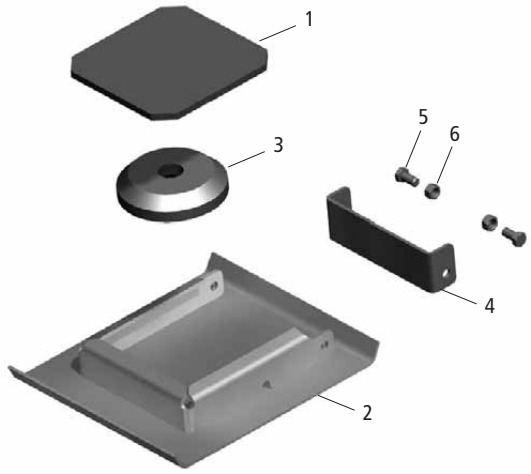

PART NO.	BASE THICKNESS	WEIGHT LBS. [kg]
716058	.12" [3.0mm]	15.70 [7.12]

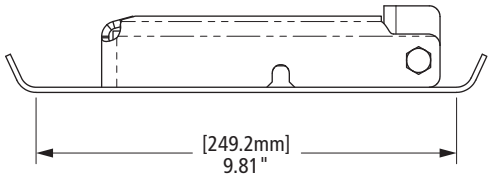

NO.	DESCRIPTION	PART NO.	QTY.	WEIGHT LBS. [kg]
1	Plate, End - RCF	730637	1	3.47 [1.57]
2	Foot W/A, 10 X 10 - RCF	730640	1	7.79 [3.53]
3	Pad, Cushion Foot	728003	1	0.63 [0.29]
4	Strap, Interchangeable - RCF	730638	1	0.70 [0.32]
5	Screw, Hex Cap 3/8-16 X 3/4 GR 5 Zinc Plated Rept	XB-HHC-050-69	2	0.04 [0.02]
6	Nut, Self LKG 3/8-16 Grade B	XB-SLN-012-04	2	0.01 [0.005]

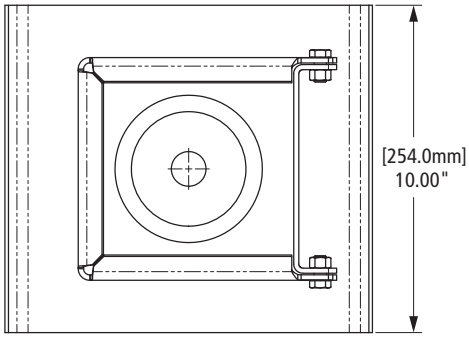

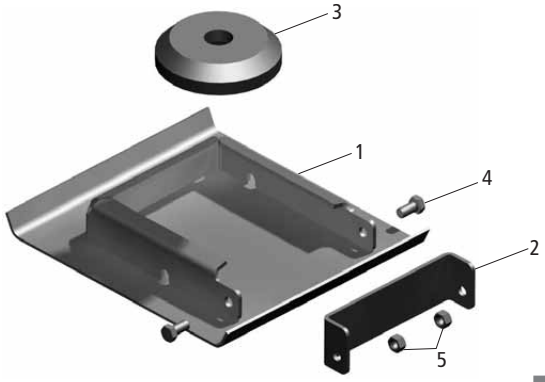

PART NO.	BASE THICKNESS	WEIGHT LBS. [kg]
716059	.12" [3.0mm]	12.20 [5.53]

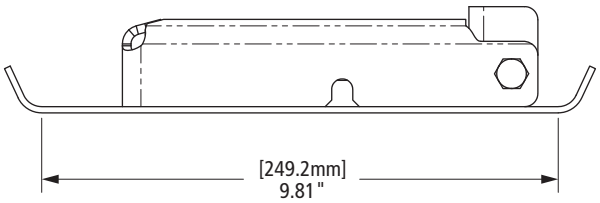

NO.	DESCRIPTION	PART NO.	QTY.	WEIGHT LBS. [kg]
1	Foot W/A, 10 X 10 - RCF	730640	1	7.79 [3.53]
2	Strap, Interchangeable - RCF	730638	1	0.70 [0.32]
3	Pad, Cushion foot	728003	1	0.63 [0.29]
4	Screw, Hex Cap 3/8-16 X 3/4 GR 5 Zinc Plated REPT	XB-HHC-050-69	2	0.04 [0.02]
5	Nut, SELF LKG 3/8-16 GRADE B	XB-SLN-012-04	2	0.01 [0.005]

 Amendments and errors reserved. © SAF-HOLLAND, Inc.

Removable Cushion Foot - Square

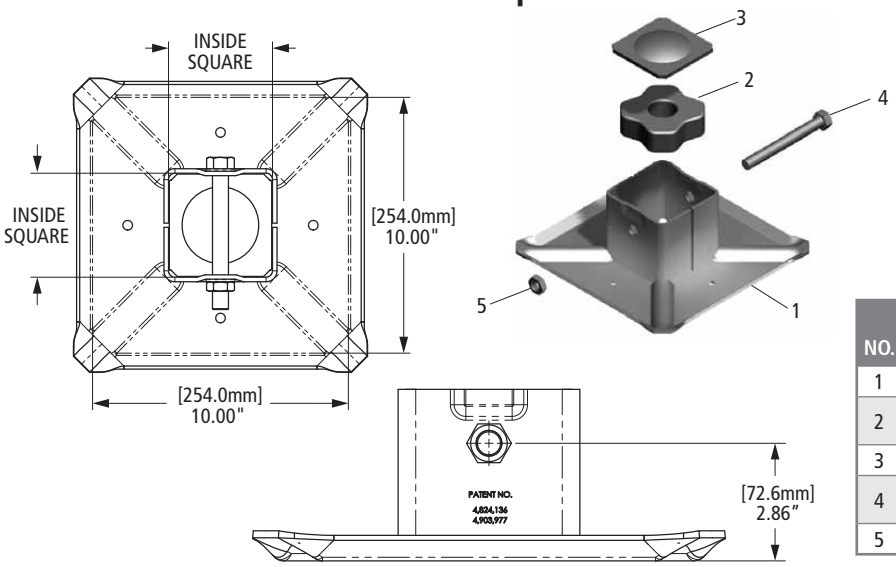

PART NO.	SIDE THICKNESS	BASE THICKNESS	WEIGHT LBS. [kg]
LG0048-01	.18" [4.6mm]	.17" [4.3mm]	9.70 [4.40]

NO.	DESCRIPTION	PART NO.	QTY.	WEIGHT LBS. [kg]
1	Foot W/A, Cushion	LG0732-01	1	9.69 [4.40]
2	Cushion, Rubber - Model 51000	XB-LG0726	1	1.04 [0.47]
3	Plate, Cushion - Atlas 55	LG0725	1	1.07 [0.49]
4	Screw, Hex HD 5/8-11 X 5.500	XB-HHB-050-70	1	0.57 [0.26]
5	Nut, Prev Torque	XB-SP0012-10	1	0.07 [0.03]

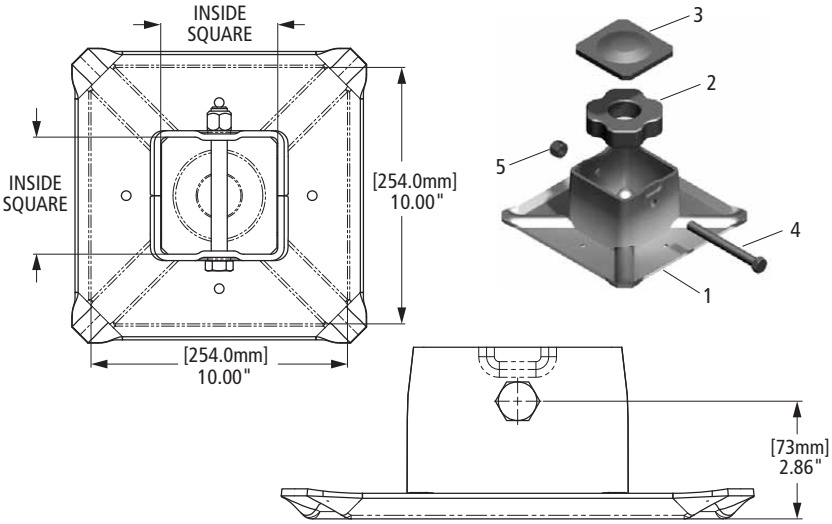

PART NO.	WEIGHT LBS. [kg]	SIDE THICKNESS	BASE THICKNESS
RK-V-024	11.60 [5.26]	.25" [6.4mm]	.17" [4.3mm]

NO.	DESCRIPTION	PART NO.	QTY.	WEIGHT LBS. [kg]
1	Foot S/A, Mark V Removable Cushion	XA-V-796-RCF	1	11.59 [5.26]
2	Cushion, Rubber-50,000	XB-LG0713	1	1.22 [0.55]
3	Plate, Cushion Foot	LG1829	1	2.26 [1.03]
4	HHCS, 5/8"-11 x 6" GR. 2 Zinc Pl.	XB-HHC-050-114	1	0.60 [0.27]
5	Nut, 5/8"-11 Top Lock GR.C ZInc Pl.	XB-06179-2	1	0.09 [0.04]

Heavy Duty Square

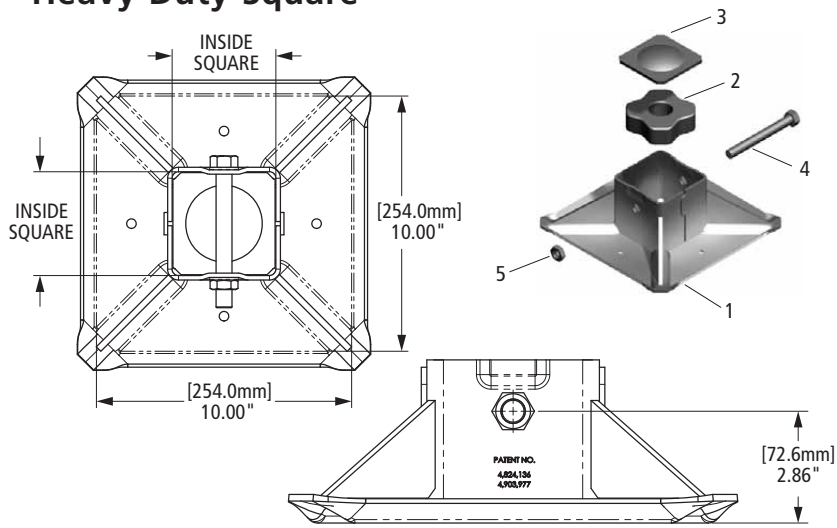

PART NO.	SIDE THICKNESS	BASE THICKNESS	WEIGHT LBS. [kg]
LG0048-10	.18" [4.6mm]	.17" [4.3mm]	11.20 [5.08]

NO.	DESCRIPTION	PART NO.	QTY.	WEIGHT LBS. [kg]
1	Cushion Foot W/A	LG0732-02	1	11.40 [5.17]
2	Cushion, Rubber	XB-LG0726	1	1.04 [0.47]
3	Plate	LG0725	1	1.07 [0.49]
4	Bolt, Hex, HD, 5/8"-11 x 5 1/2 GR2	XB-HHB-050-70	1	0.57 [0.26]
5	Nut, Self-Locking 5/8-11	XB-SP0012-10	1	0.07 [0.03]

XL-AM10013PM-en-US Rev F 08-2014 Amendments and errors reserved. © SAF-HOLLAND, Inc.

Sand Shoe Base

PART NO.	LENGTH	WIDTH	HOLE CNTR HT	INSIDE SQ	MODEL	WEIGHT LBS. [kg]
LG0124	14.25" [361.9]	12.00" [304.8]	2.94" [74.6]	4.06" [103.1]	51000/52000	16.01 [7.26]
50616030	7.00" [177.8]	10.00" [254.0]	2.94" [74.6]	4.06" [103.1]	FG4	9.10 [4.13]

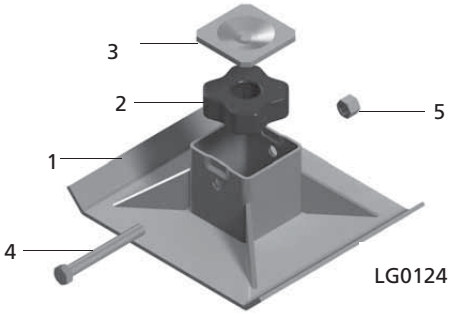

Replacement Parts (In Quantities Shown)

PART NO.	ITEM #1	ITEM #1 WEIGHT LBS. [kg]	ITEM #2	ITEM #2 WEIGHT LBS. [kg]	ITEM #3	ITEM #3 WEIGHT LBS. [kg]	ITEM #4	ITEM #4 WEIGHT LBS. [kg]	ITEM #5	ITEM #5 WEIGHT LBS. [kg]
LG0124	LG0123	18.22 [8.26]	XB-LG0726	1.04 [0.47]	LG0725	1.07 [0.49]	XB-HHB-050-70	0.57 [0.26]	XB-SP0012-10	0.07 [0.03]
50616030	LG2727	8.17 [3.75]	XB-LG0726	1.04 [0.47]	LG0725	1.07 [0.49]	XB-HHB-050-70	0.57 [0.26]	XB-SP0012-10	0.07 [0.03]

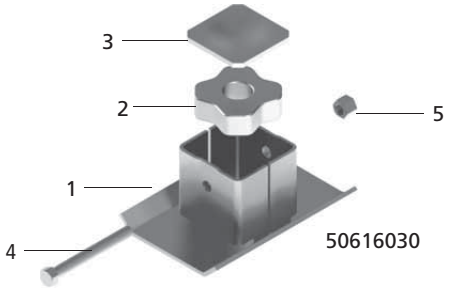

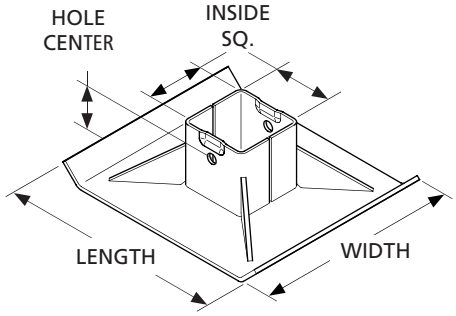

Round Foot

PART NO.	FOOT DIA	INSIDE SQ	HOLE CNTR HT	MODEL	WEIGHT LBS. [kg]
LG0068	9.81" [249.2]	4.56" [115.8]	2.94" [74.7]	50000	7.80 [3.54]
LG0045-01	9.81" [249.2]	4.06" [103.1]	2.94" [74.7]	51000/52000	7.40 [3.36]
LG0043-01	11.88" [301.8]	4.06" [103.1]	2.94" [74.7]	51000/52000	9.40 [4.26]
LG0044-01	13.38" [339.9]	4.06" [103.1]	2.94" [74.7]	51000/52000	13.20 [6.00]

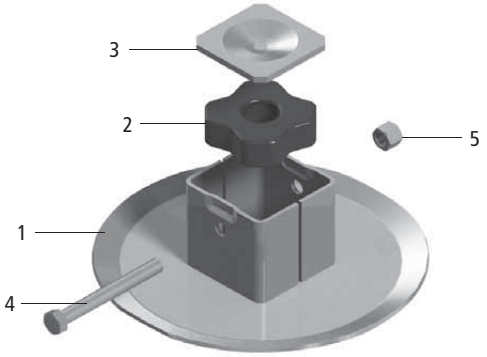

Replacement Parts (In Quantities Shown)

PART NO.	ITEM #1	ITEM #1 WEIGHT LBS. [kg]	ITEM #2	ITEM #2 WEIGHT LBS. [kg]	ITEM #3	ITEM #3 WEIGHT LBS. [kg]
LG0068	LG0711	7.80 [3.54]	XB-LG0713	1.22 [0.55]	LG0714	1.77 [0.80]
LG0045-01	LG0718-01	7.39 [3.35]	XB-LG0726	1.04 [0.47]	LG0725	1.07 [0.49]
LG0043-01	LG0740-01	9.39 [4.26]	XB-LG0726	1.04 [0.47]	LG0725	1.07 [0.49]
LG0044-01	LG0730-01	11.10 [5.03]	XB-LG0726	1.04 [0.47]	LG0725	1.07 [0.49]

PART NO.	ITEM #4	ITEM #4 WEIGHT LBS. [kg]	ITEM #5	ITEM #5 WEIGHT LBS. [kg]
LG0068	XB-HHB-050-58	0.61 [0.28]	XB-SP0012-10	0.07 [0.03]
LG0045-01	XB-HHB-050-70	0.57 [0.26]	XB-SP0012-10	0.07 [0.03]
LG0043-01	XB-HHB-050-70	0.57 [0.26]	XB-SP0012-10	0.07 [0.03]
LG0044-01	XB-HHB-050-70	0.57 [0.26]	XB-SP0012-10	0.07 [0.03]

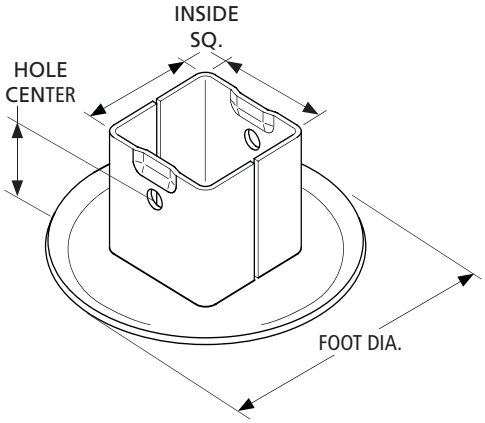

 Amendments and errors reserved. © SAF-HOLLAND, Inc.

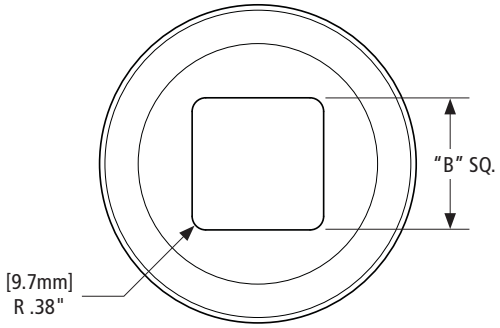

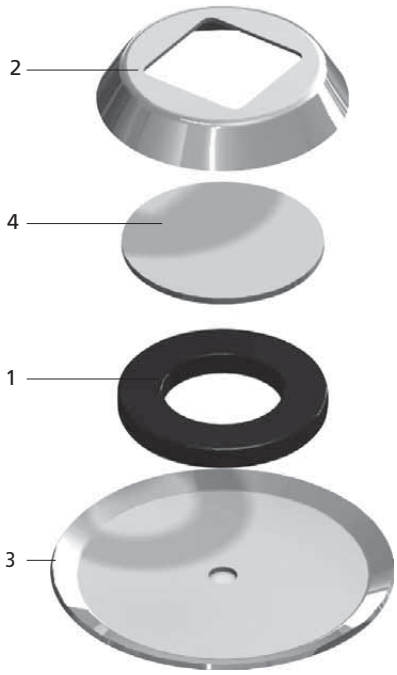

Ø10" Cushion Foot Replacement Parts

NO.	DESCRIPTION	PART NO.	QTY.	WEIGHT LBS. [kg]
1	Rubber Cushion	XB-LG0472	1	1.69 [0.77]
2	Cushion Cup	SEE CHART	1	SEE CHART
3	Cushion Pad	LG0573	1	4.23 [1.92]
4*	Cushion Plate	LG0474	1	2.71 [1.23]

Ø12" Cushion Foot Replacement Parts

NO.	DESCRIPTION	PART NO.	QTY.	WEIGHT LBS. [kg]
1	Rubber Cushion	XB-LG0472	1	1.69 [0.77]
2	Cushion Cup	SEE CHART	1	SEE CHART
3	Cushion Pad	LG0527	1	6.23 [2.83]
4*	Cushion Plate	LG0474	1	2.71 [1.23]

Ø13-1/2" Cushion Foot Replacement Parts

NO.	DESCRIPTION	PART NO.	QTY.	WEIGHT LBS. [kg]
1	Rubber Cushion	XB-LG0472	1	1.69 [0.77]
2	Cushion Cup	SEE CHART	1	SEE CHART
3	Cushion Pad	LG0473	1	7.89 [3.58]
4*	Cushion Plate	LG0474	1	2.71 [1.23]

* Item 4 is welded to the bottom of Retract Tube.

Cushion Cup Chart

PART NO.	DIM "B" SQ.	WEIGHT LBS. [kg]
LG0475	4.63" [117.6]	2.71 [1.23]
LG0475-01	4.13" [104.9]	2.92 [1.32]
LG0475-03	3.63" [92.2]	3.10 [1.41]

Cushion Pad

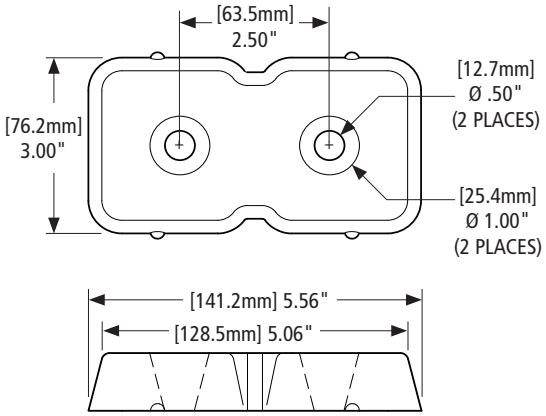

PART NO.	WEIGHT LBS. [kg]
XB-04676	0.59 [0.27]

XL-AM10013PM-en-US Rev F 08-2014 Amendments and errors reserved. © SAF-HOLLAND, Inc.

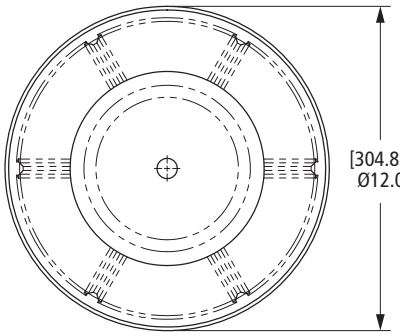

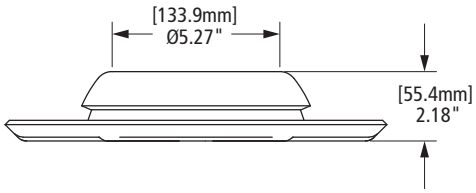

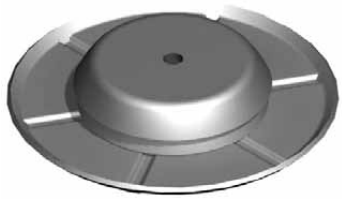

PART NO.	BASE THICKNESS	WEIGHT LBS. [kg]
50616018	.19" [4.8mm]	13.70 [6.21]

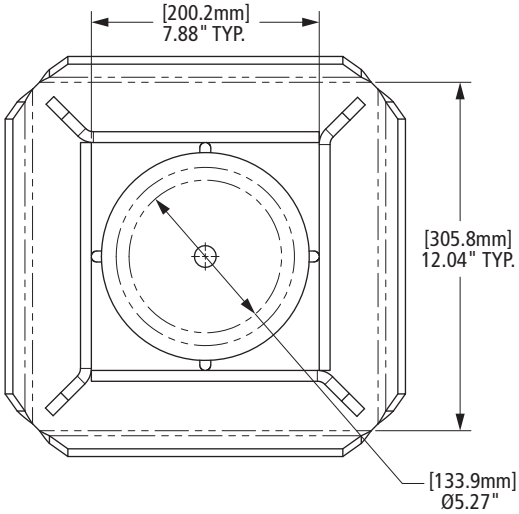

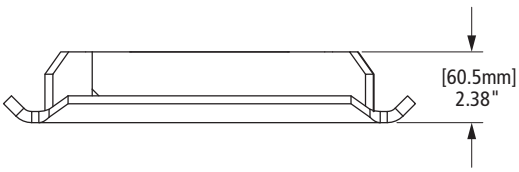

PART NO.	SIDE THICKNESS	BASE THICKNESS	WEIGHT LBS. [kg]
50616019	.38" [9.7mm]	.38" [9.7mm]	35.20 [15.97]

 Amendments and errors reserved. © SAF-HOLLAND, Inc.

SAF-HOLLAND Group

Dolly Jack Shoes

Standard

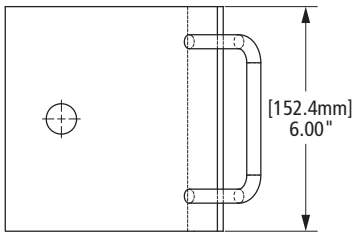

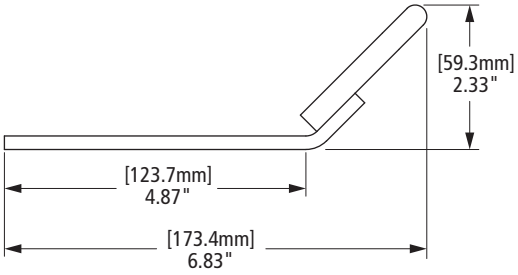

PART NO.	BASE THICKNESS	WEIGHT LBS. [kg]
50616020	.22" [5.6mm]	2.40 [1.09]

Removable

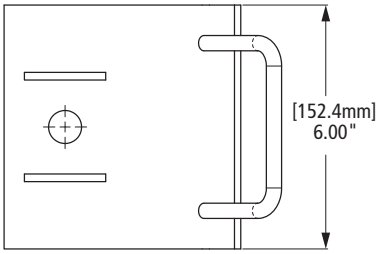

PART NO.	SIDE THICKNESS	BASE THICKNESS	WEIGHT LBS. [kg]
50616021	.19" [4.8mm]	.22" [5.6mm]	2.80 [1.27]

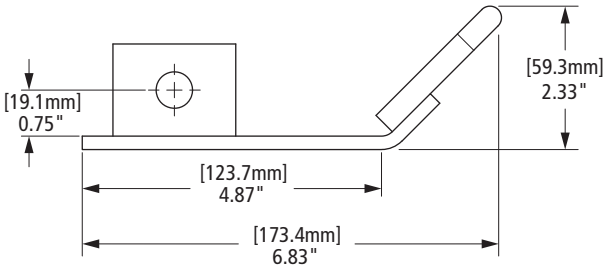

XL-AM10013PM-en-US Rev F 08-2014 Amendments and errors reserved. © SAF-HOLLAND, Inc.

THIS PAGE INTENTIONALLY LEFT BLANK

 Amendments and errors reserved. © SAF-HOLLAND, Inc.

Hollow Axles

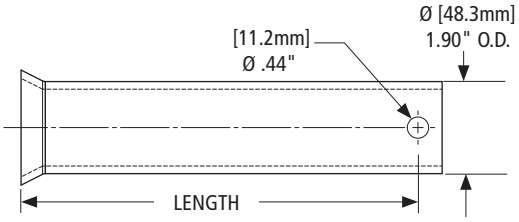

PART NO.	LENGTH [mm]	WEIGHT LBS [kg]
750005	8.69" [220.7]	1.25 [0.57]
LG0070-01	15.12" [384.0]	6.14 [2.79]

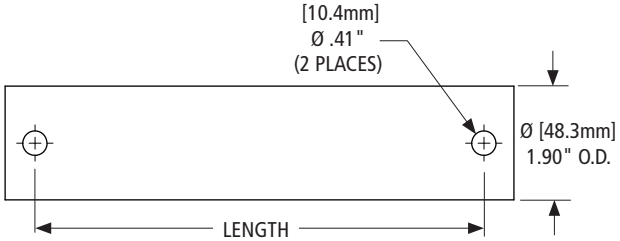

PART NO.	LENGTH [mm]	WEIGHT LBS. [kg]
LG2589	8.50" [215.9]	2.05 [0.93]
XA-V-1901-2	15.00" [381.0]	4.53 [2.05]
XA-V-1901-3	16.75" [425.5]	5.10 [2.31]

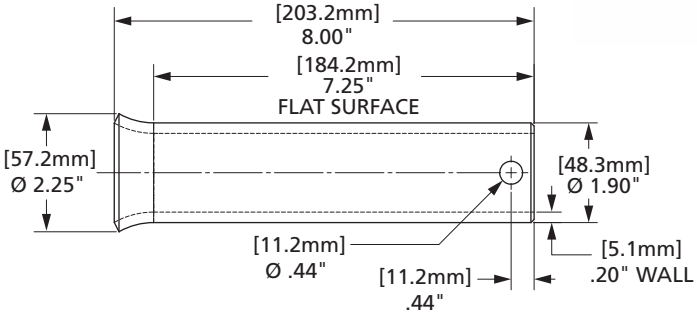

PART NO.	WEIGHT LBS. [kg]
50616042	2.60 [1.18]

XL-AM10013PM-en-US Rev F 08-2014 Amendments and errors reserved. © SAF-HOLLAND, Inc.

Hollow Axle Kits

PART NO.	LENGTH [mm]	ITEM NO. 1	ITEM NO. 1 WEIGHT LBS [kg]	WEIGHT LBS [kg]
50616022	15.12" [384.0]	LG0070-01	6.14 [2.79]	6.10 [2.77]
50616029	8.75" [222.3]	LG0070-04	3.57 [1.62]	3.60 [1.63]

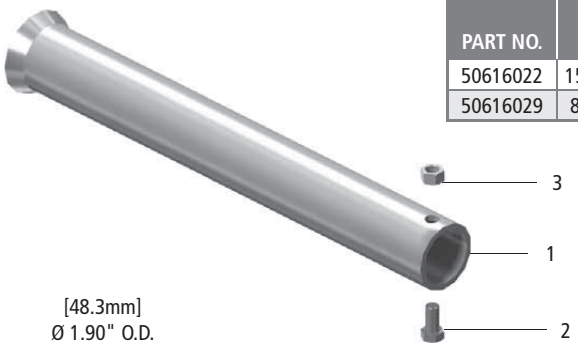

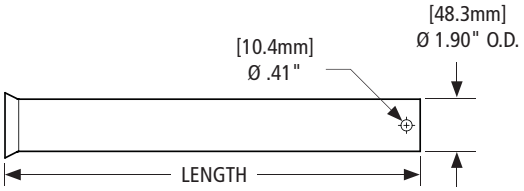

NO.	DESCRIPTION	PART NO.	QTY.	WEIGHT LBS [kg]
1	Axle Assembly	SEE TABLE	1	SEE TABLE
2	Hex Cap Screw .38"-16 x .75" GR5	XB-HHC-050-69	1	0.04 [0.02]
3	Self Locking Nut .38"-16	XB-SLN-012-04	1	0.01 [0.005]

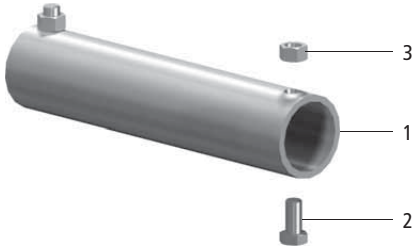

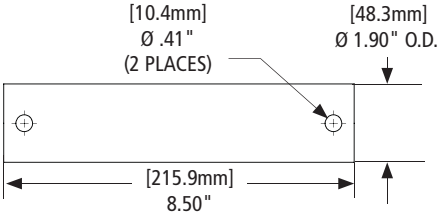

PART NO.	WEIGHT LBS [kg]
50616023	3.40 [1.54]

NO.	DESCRIPTION	PART NO.	QTY.	WEIGHT LBS [kg]
1	Axle Assembly	LG0070-02	1	1.14 [0.52]
2	Hex Cap Screw .38"-16 x .75" GR5	XB-HHC-050-69	1	0.04 [0.02]
3	Self Locking Nut .38"-16	XB-SLN-012-04	1	0.01 [0.005]

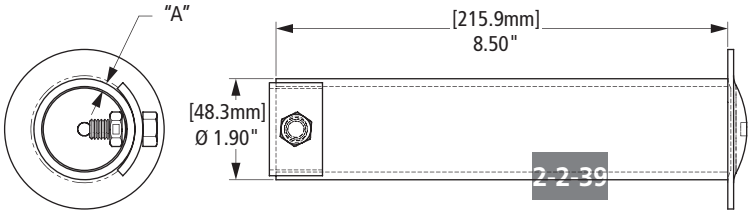

PART NO.	"A" [mm]	WEIGHT LBS. [kg]
50616040	.20" [5.1]	2.30 [1.04]
50616043	.15" [3.8]	2.20 [1.00]
50616044	.28" [7.1]	3.69 [1.67]

 Amendments and errors reserved. © SAF-HOLLAND, Inc.

SAF-HOLLAND Group

Solid Axles

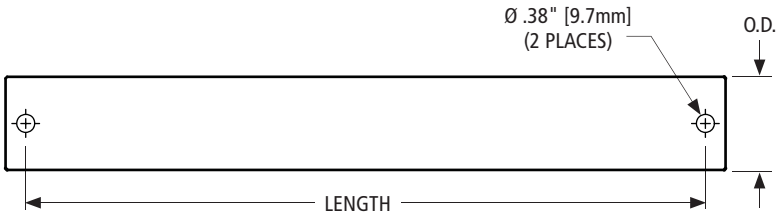

PART NO.	LENGTH [mm]	O.D. [mm]	WEIGHT LBS [kg]
XA-V-1903-1	8.25" [209.5]	1.94" [49.3]	6.80 [3.08]
XA-V-1903-2	15.00" [381.0]	1.94" [49.3]	12.44 [5.64]
XA-V-1903-3	16.75" [425.5]	1.94" [49.3]	13.90 [6.30]
LG0204-01	14.88" [378.0]	1.88" [47.8]	11.50 [5.22]
LG0204-04	8.25" [209.6]	1.88" [47.8]	6.30 [2.86]
LG0204-05	16.00" [406.4]	1.88" [47.8]	12.31 [5.58]
LG0204-06	16.50" [419.1]	1.88" [47.6]	12.72 [5.77]
LG0204-07	8.75" [222.2]	1.88" [47.6]	6.67 [3.03]
LG0204-08	8.75" [222.2]	1.88" [47.6]	6.69 [3.04]

Solid Axle Kits

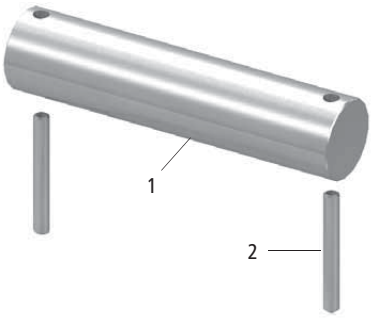

PART NO.	LENGTH [mm]	ITEM NO. 1	ITEM NO. 1 WEIGHT LBS [kg]	WEIGHT LBS [kg]
50616024	8.25" [209.6]	XA-V-1903-1	6.79 [3.08]	6.80 [3.08]
50616025	15.00" [381.0]	XA-V-1903-2	12.44 [5.64]	12.40 [5.62]
50616026	16.75" [425.5]	XA-V-1903-3	13.90 [6.30]	13.90 [6.30]

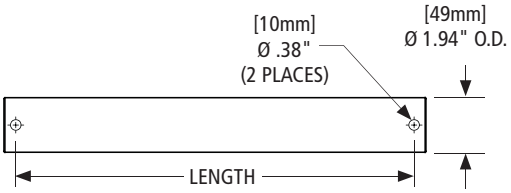

NO.	DESCRIPTION	PART NO.	QTY.	WEIGHT LBS [kg]
1	Solid Axle	SEE TABLE ABOVE	1	SEE TABLE ABOVE
2	Spring Pin	XB-21-S-375-3000	2	0.02 [0.01]

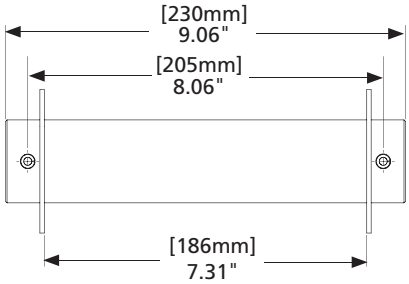

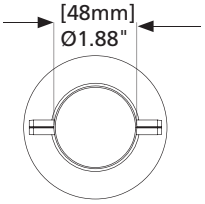

PART NO.	WEIGHT LBS [kg]
50616041	7.42 [3.37]

XL-AM10013PM-en-US Rev F 08-2014 Amendments and errors reserved. © SAF-HOLLAND, Inc.

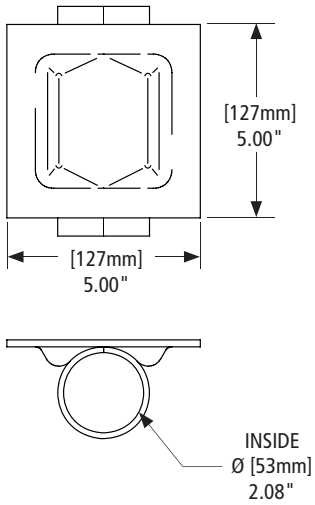

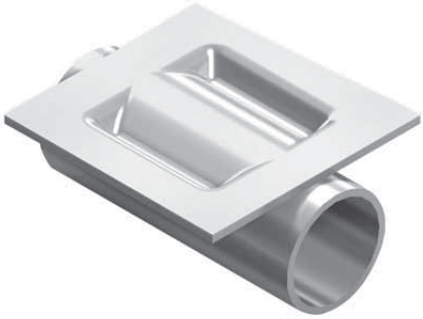

PART NO.	WEIGHT LBS [kg]
50616027	3.10 [1.41]

 Amendments and errors reserved. © SAF-HOLLAND, Inc.

SAF-HOLLAND Group

Wheels

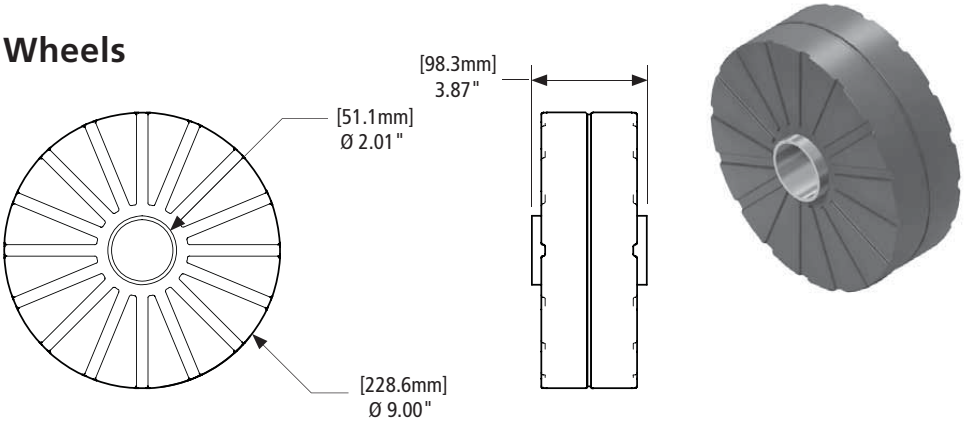

PART NO.	WEIGHT LBS [kg]
50616028	9.20 [4.17]

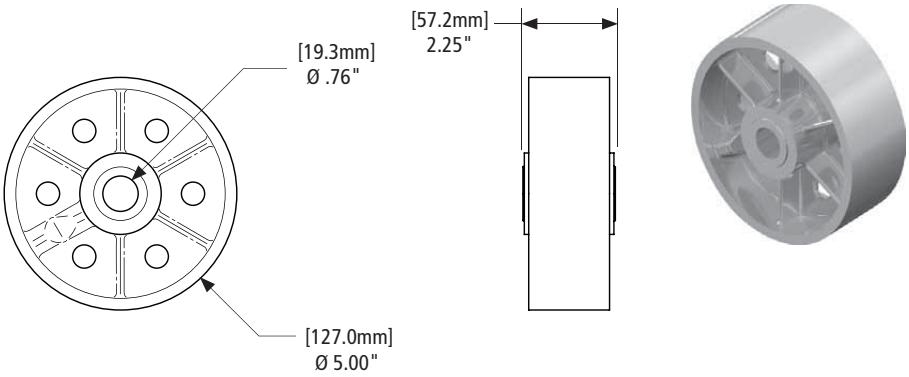

PART NO.	WEIGHT LBS [kg]
XB-WHL-026-11	4.40 [2.00]

Heavy Duty Wheel/Shoe Combination

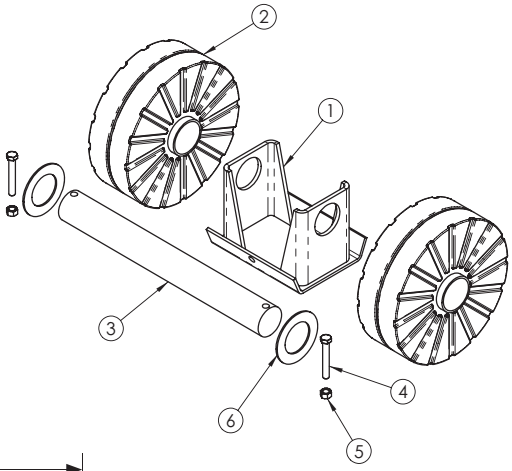

PART NO.	WEIGHT LBS [kg]
LG0063-10	36.50 [16.56]

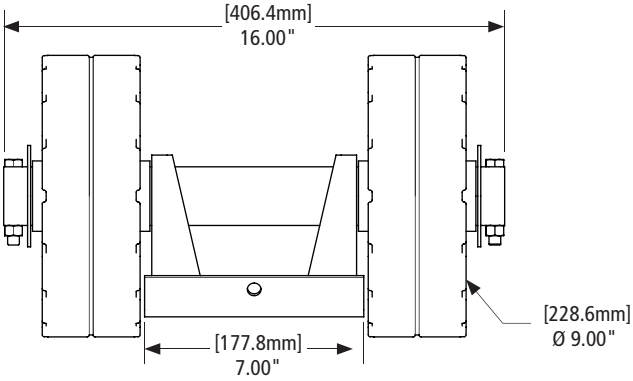

Replacement Parts

NO.	DESCRIPTION	PART NO.	QTY.	WEIGHT LBS [kg]
1	Shoe Center Assembly	LG2066	1	5.90 [2.68]
2	Wheel	XB-V-747-HD-1	2	8.96 [4.06]
3	Axle	LG0204-05	1	12.31 [5.58
4	HHCS .38"-16 x 2.5" GR5	XB-HHC-050-65	2	0.08 [0.04]
5	Self Locking Nut .38"-16 Grade B	XB-SLN-012-04	2	0.01 [0.005]
6	Washer	LG2427	2	0.16 [0.07]

XL-AM10013PM-en-US Rev F 08-2014 Amendments and errors reserved. © SAF-HOLLAND, Inc.

Swivel Casters

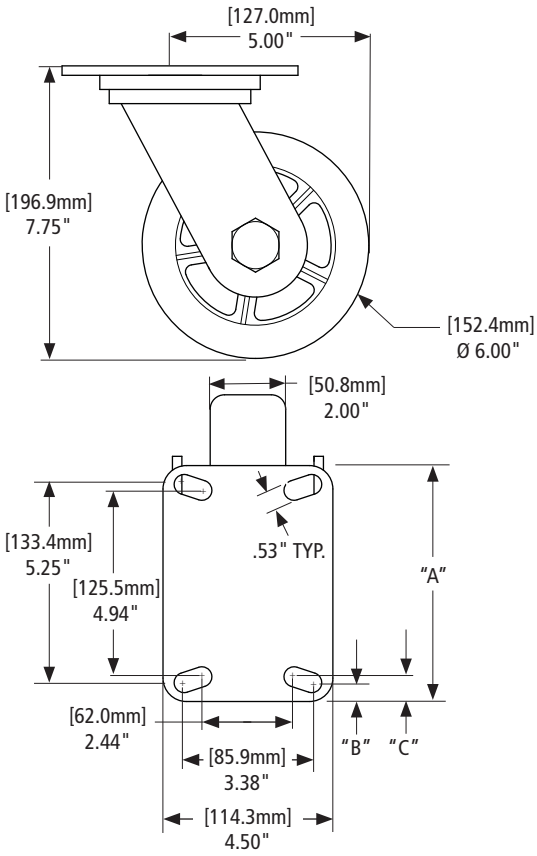

PART NO.	LOAD CAPACITY IN LBS. [kg]	NOTES	DIM "A" [mm]	DIM "B" [mm]	DIM "C" [mm]	WEIGHT LBS. [kg]
XB-03857	1200 [544.31]	Iron Wheel	6.50" [165]	.63" [16]	.28" [7]	9.00 [4.08]
XB-03695	800 [362.87]	Rubber Wheel	6.25" [159]	.50" [13]	.66" [17]	8.17 [3.71]

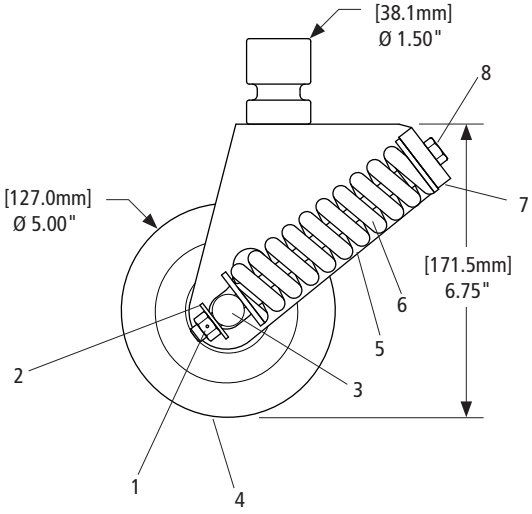

PART NO.	ITEM NO. 2	ITEM NO. 2 WEIGHT LBS. [kg]	ITEM NO. 4	ITEM NO. 4 WEIGHT LBS. [kg]	NOTES	WEIGHT LBS. [kg]
XA-V-350	XB-PW-016-03	0.01 [0.005]	XB-WHL-026-11	4.12 [1.87]	Cast Iron Wheel	13.43 [6.09]
XA-V-350-R	XB-1108	0.02 [0.01]	XB-V-315-1	1.04 [0.47]	Plastic Wheel	4.38 [1.99]

Replacement Parts

NO.	DESCRIPTION	PART NO.	QTY.	WEIGHT LBS. [kg]
1	Lock Nut .38"-16	XB-SLN-012-04	2	0.01 [0.005]
2	Washer .38"	SEE TABLE ABOVE	2	SEE TABLE ABOVE
3	Axle	XA-V-349	1	0.75 [0.34]
4	Wheel	SEE TABLE ABOVE	1	SEE TABLE ABOVE
5	Fork Assembly	XA-V-319	1	0.01 [0.005]
6	Spring	XB-248-A	2	1.14 [0.52]
7	Spring Plug	XA-V-346	4	0.08 [0.04]
8	HHCS .38"-16 x 7" Lg.	XB-V-348	2	0.30 [0.14]

 Amendments and errors reserved. © SAF-HOLLAND, Inc.

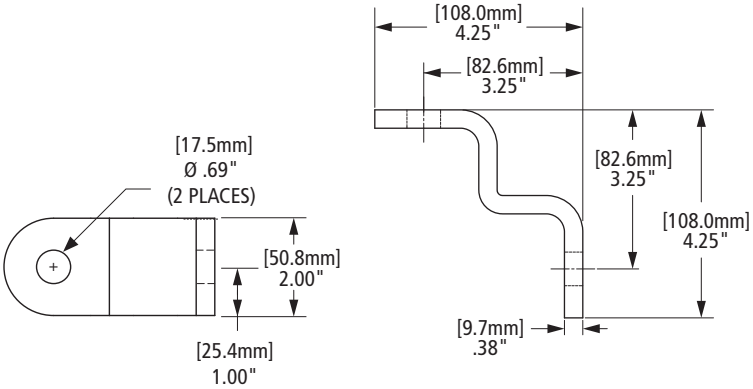

PART NO.	WEIGHT LBS [kg]
730157	1.42 [0.64]

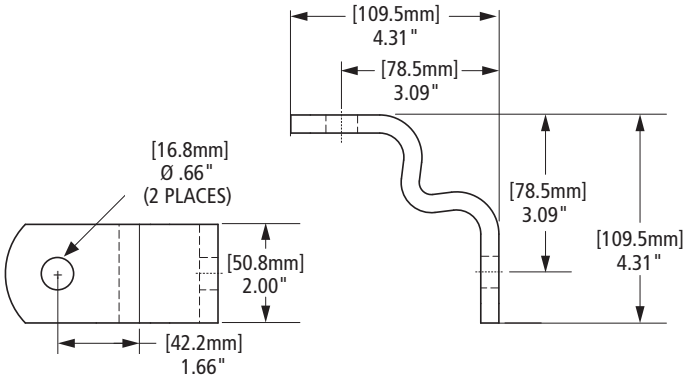

PART NO.	WEIGHT LBS [kg]
LG0266	1.48 [0.67]

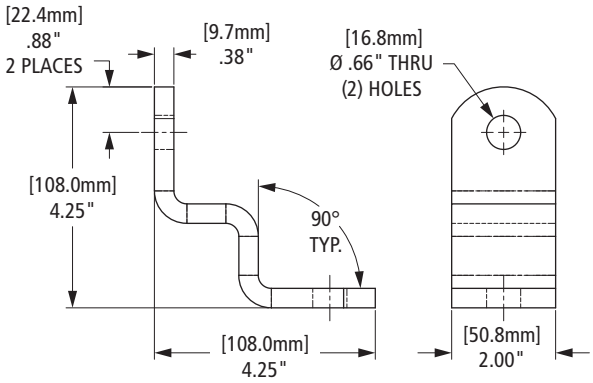

PART NO.	WEIGHT LBS [kg]
50618018	1.50 [0.68]

XL-AM10013PM-en-US Rev F 08-2014 Amendments and errors reserved. © SAF-HOLLAND, Inc.

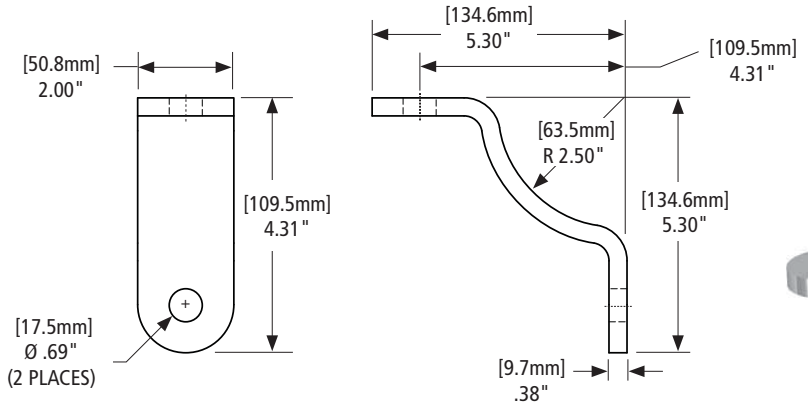

PART NO.	WEIGHT LBS [kg]
730005	1.67 [0.76]

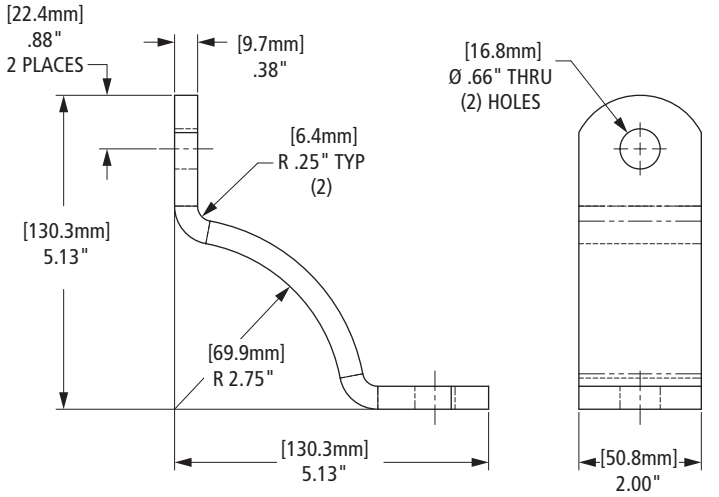

PART NO.	WEIGHT LBS [kg]
50618020	1.80 [0.82]

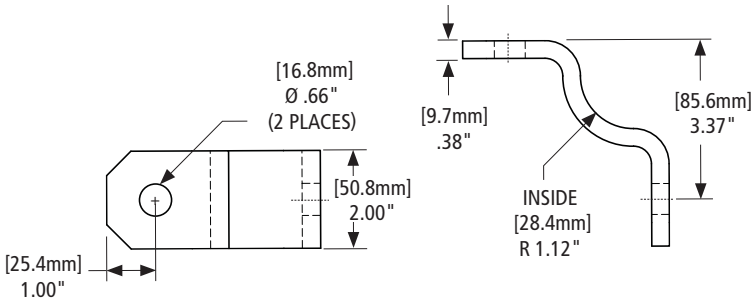

PART NO.	WEIGHT LBS [kg]
XA-V-1938	1.47 [0.67]

 Amendments and errors reserved. © SAF-HOLLAND, Inc.

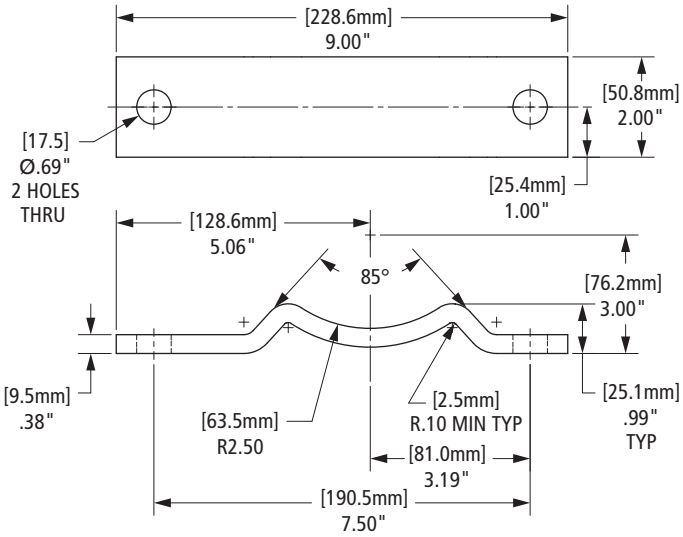

PART NO.	WEIGHT LBS [kg]
730052	1.96 [0.89]

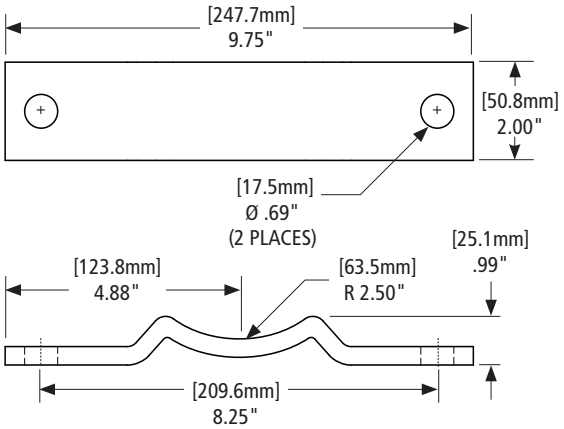

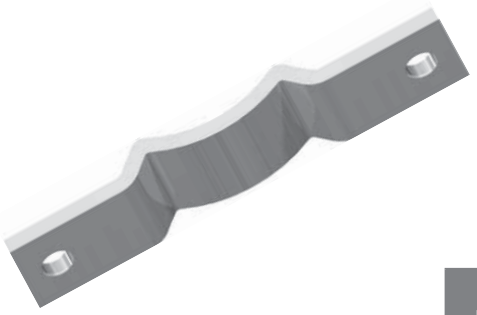

PART NO.	WEIGHT LBS [kg]
730051	2.12 [0.96]

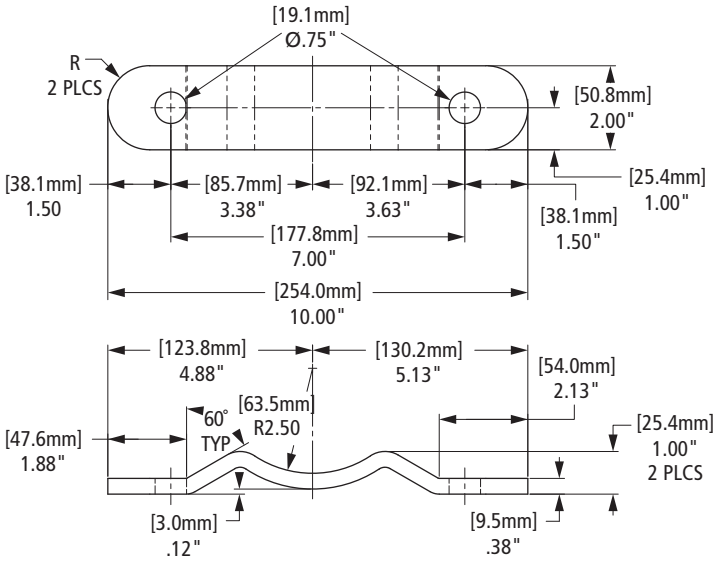

PART NO.	WEIGHT LBS [kg]
50618047	2.00 [0.90]

SUB FOR PENZ 02-32

XL-AM10013PM-en-US Rev F 08-2014 Amendments and errors reserved. © SAF-HOLLAND, Inc.

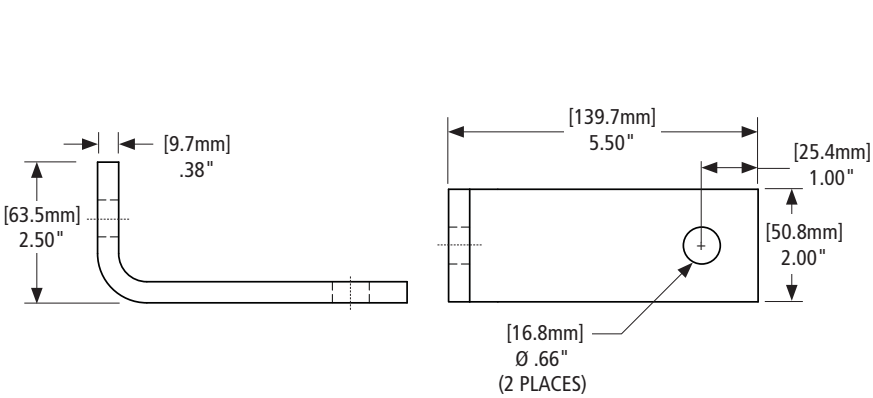

PART NO.	WEIGHT LBS [kg]
LG2334	1.53 [0.69]

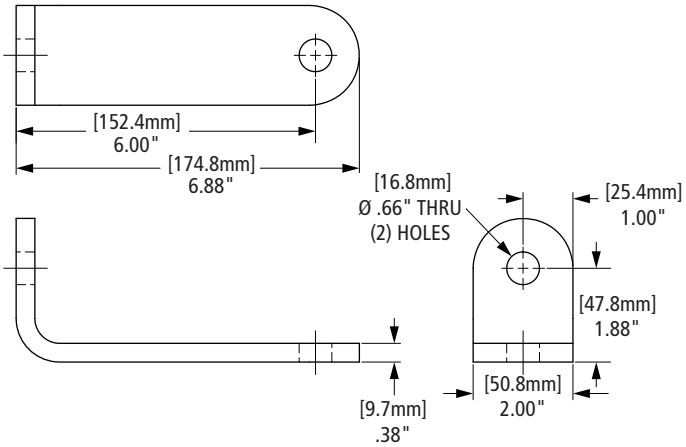

PART NO.	WEIGHT LBS [kg]
50618021	1.65 [0.75]

SUB FOR: PENZ# 02-11-A

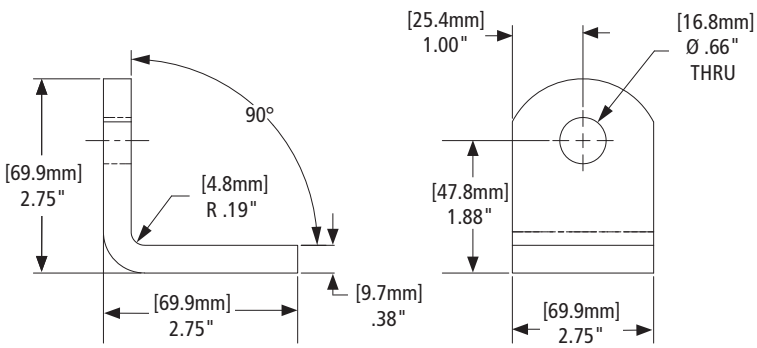

PART NO.	WEIGHT LBS [kg]
50618023	1.00 [0.45]

 Amendments and errors reserved. © SAF-HOLLAND, Inc.

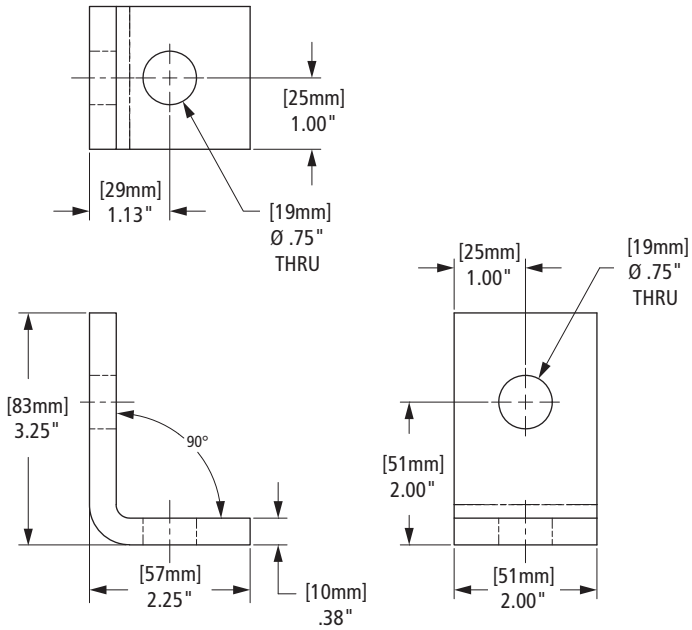

PART NO.	WEIGHT LBS [kg]
50618024	1.00 [0.45]

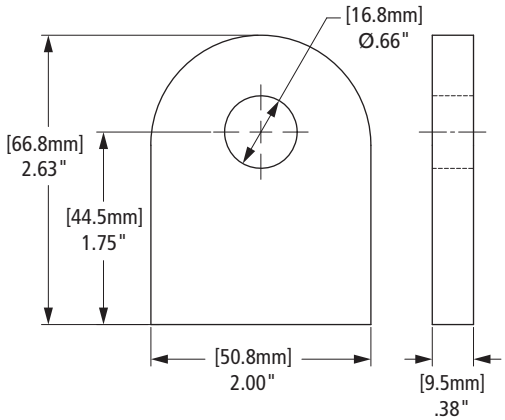

PART NO.	WEIGHT LBS [kg]
50618039	0.44 [0.20]

SUB FOR PENZ 02-10-A

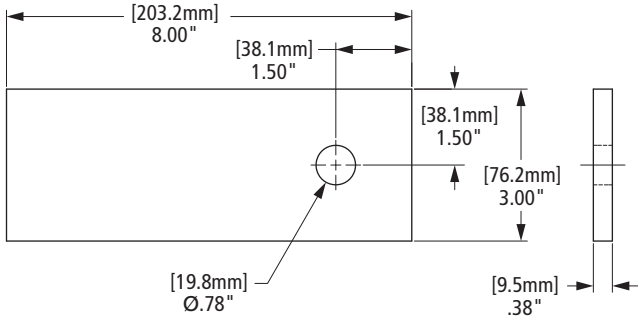

PART NO.	WEIGHT LBS [kg]
50618041	2.50 [1.33]

SUB FOR PENZ 02-44

XL-AM10013PM-en-US Rev F 08-2014 Amendments and errors reserved. © SAF-HOLLAND, Inc.

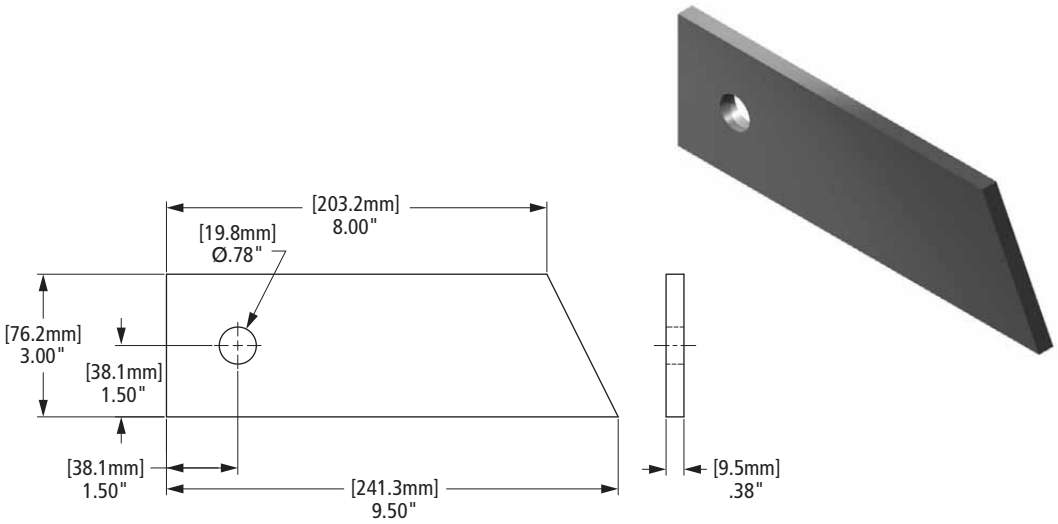

PART NO.	WEIGHT LBS [kg]
50618042	2.68 [1.22]

SUB FOR PENZ 02-45

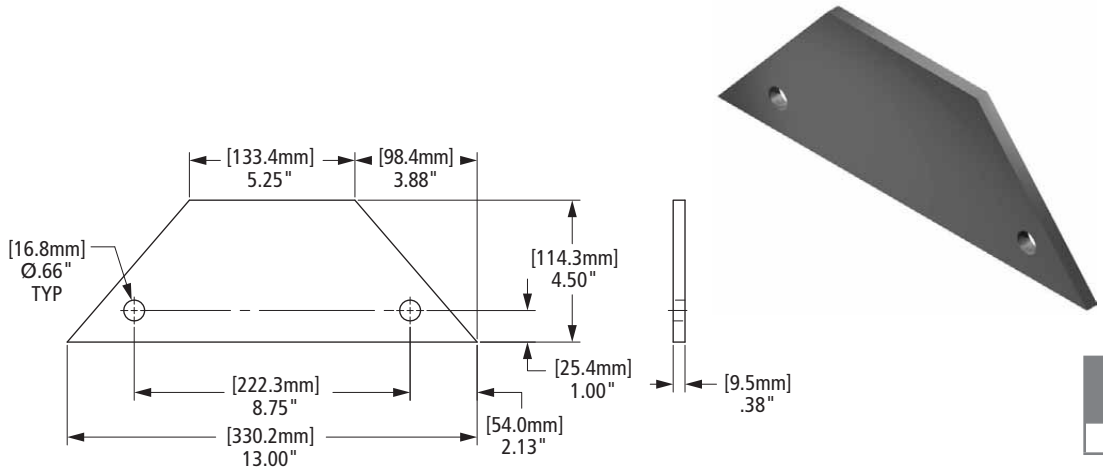

PART NO.	WEIGHT LBS [kg]
50618043	4.17 [1.89]

SUB FOR PENZ 02-46

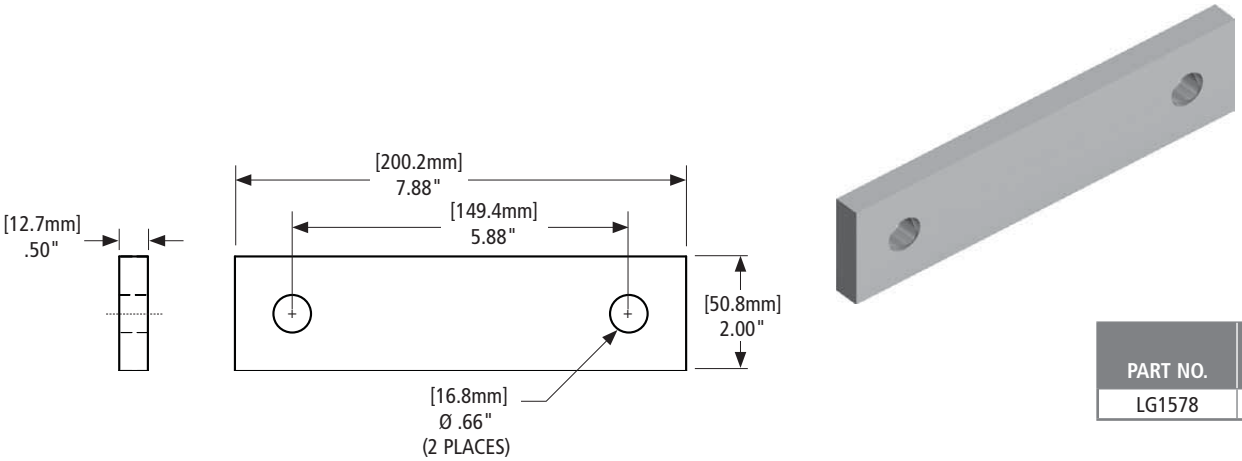

PART NO.	WEIGHT LBS [kg]
LG1578	2.15 [0.98]

 Amendments and errors reserved. © SAF-HOLLAND, Inc.

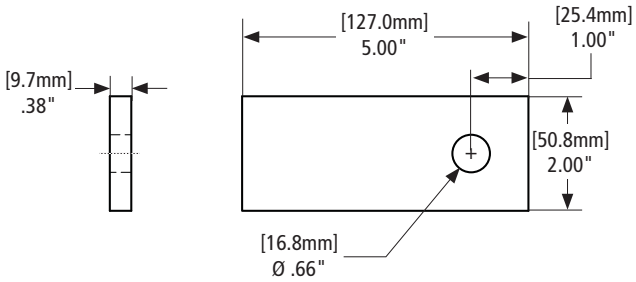

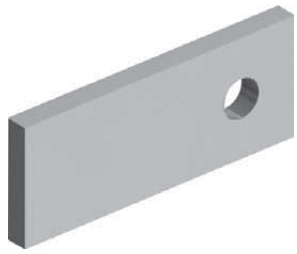

PART NO.	WEIGHT LBS [kg]
LG2536	1.02 [0.46]

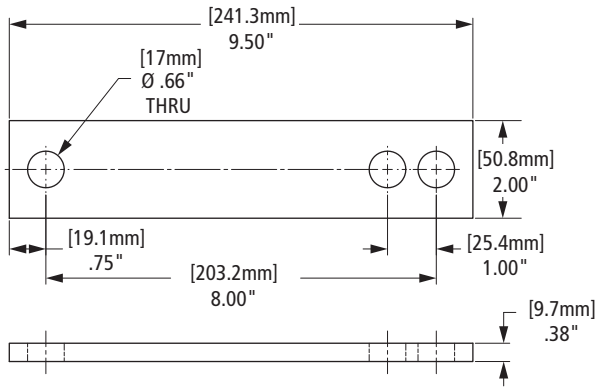

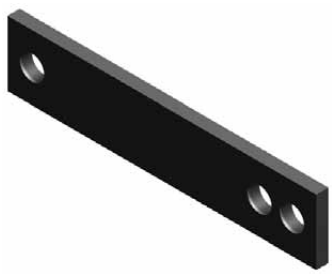

PART NO.	WEIGHT LBS [kg]
50618025	1.80 [0.82]

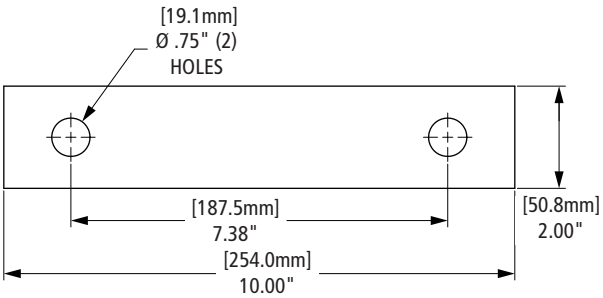

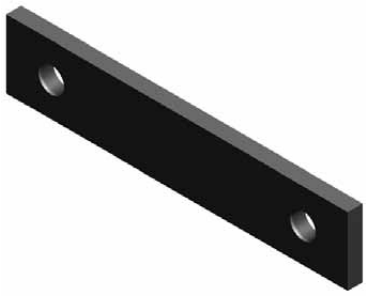

PART NO.	WEIGHT LBS [kg]
50618028	2.65 [1.20]

XL-AM10013PM-en-US Rev F 08-2014 Amendments and errors reserved. © SAF-HOLLAND, Inc.

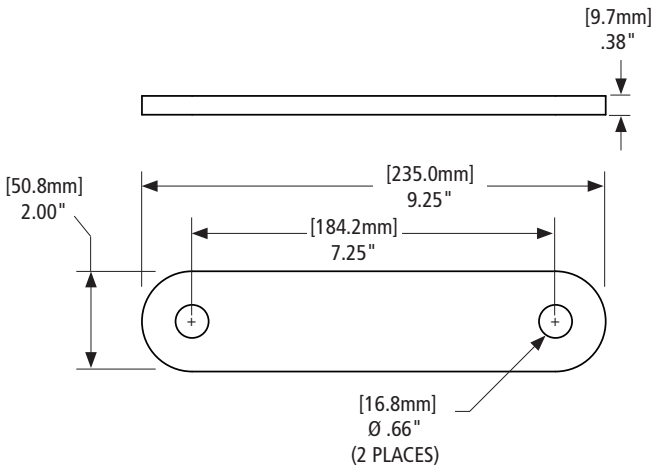

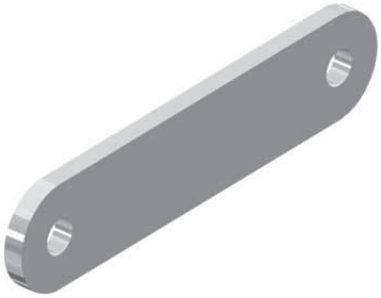

PART NO.	WEIGHT LBS [kg]
730624	1.81 [0.82]

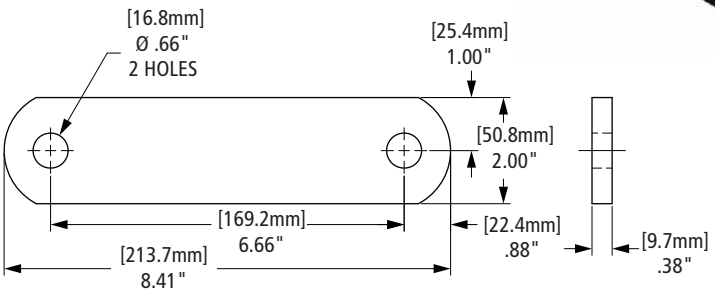

PART NO.	WEIGHT LBS [kg]
50618022	1.63 [0.74]

SUB FOR PENZ# 02-12-A

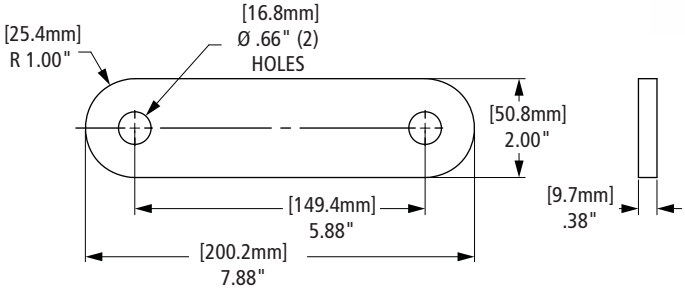

PART NO.	WEIGHT LBS [kg]
50618026	1.38 [0.63]

SUB FOR PENZ# 02-22-A

 Amendments and errors reserved. © SAF-HOLLAND, Inc.

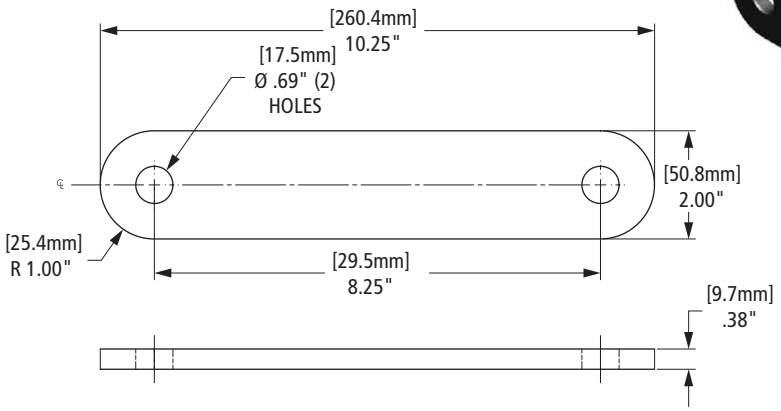

PART NO.	WEIGHT LBS [kg]
50618027	2.00 [0.91]

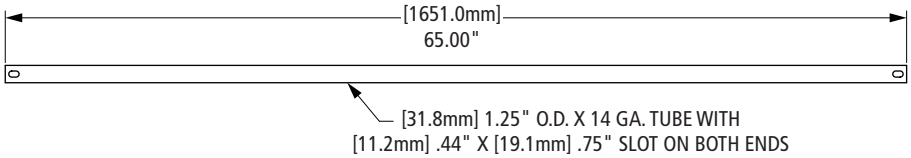

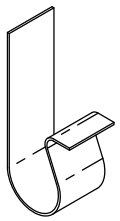

CRANK HANDLE KEEPER

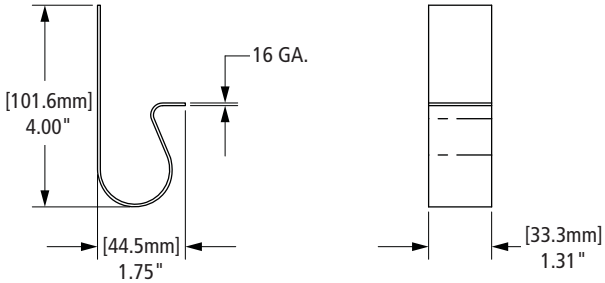

PART NO.	WEIGHT LBS [kg]
50618019	1.48 [0.67]

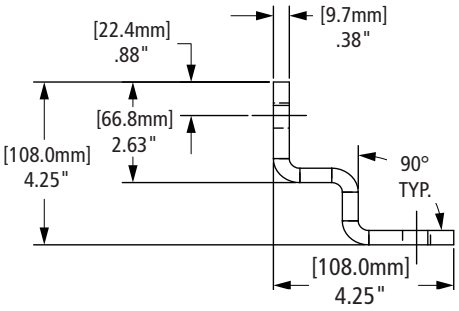

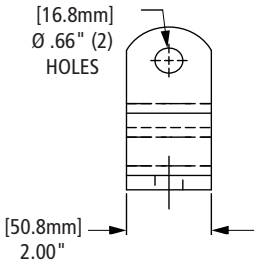

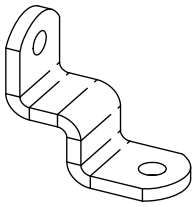

XL-AM10013PM-en-US Rev F 08-2014 Amendments and errors reserved. © SAF-HOLLAND, Inc.

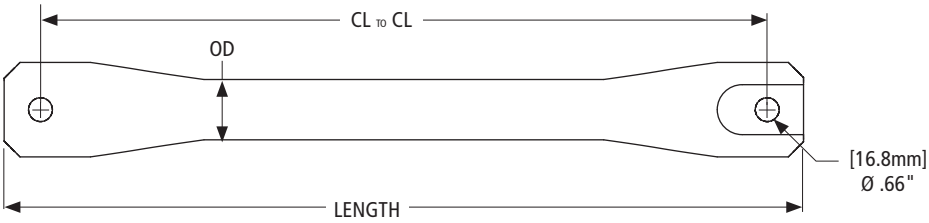

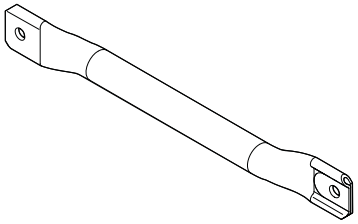

PART NO.	LENGTH [mm]	OD [mm]	CL TO CL HOLE	WEIGHT LBS. [kg]
LG0524-01	23.00" [584.2]	1.90" [48.3]	21.00" [533.4]	5.80 [2.63]
LG0525-01	17.62" [447.5]	1.90" [48.3]	15.62" [396.7]	4.50 [2.04]
*LG0091-#	2"[50.8] + CL TO CL HOLE	1.66" [42.2]	VARIES	VARIES

* The numbers following the dash represent the CL to CL hole (in.) dimension in 2 place decimal form. For part number, remove # and insert numbers after dash.
Example: If the CL to CL dimension is 24.00", the part number would be LG0091-**2400**.

Part numbers may also have a non-numeric suffix.
Example: LG0091-3250-**P** "-P" indicates paint

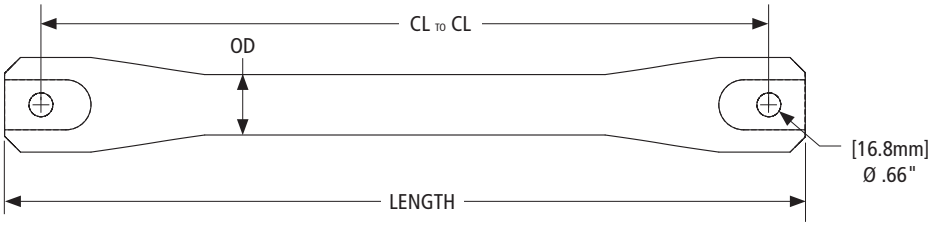

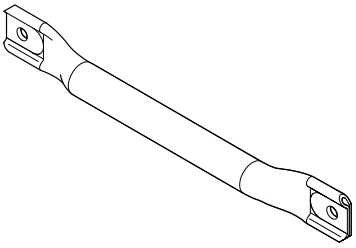

PART NO.	LENGTH [mm]	OD [mm]	CL TO CL HOLE	WEIGHT LBS. [kg]
*LG0646-#	2"[50.8] + CL TO CL HOLE	1.66" [42.2]	VARIES	VARIES

* The numbers following the dash represent the CL to CL hole (in.) dimension in 2 place decimal form. For part number, remove # and insert numbers after dash.
Example: If the CL to CL dimension is 24.00", the part number would be LG0646-**2400**.

Part numbers may also have a non-numeric suffix.
Example: LG00646-3250-**P** "-P" indicates paint

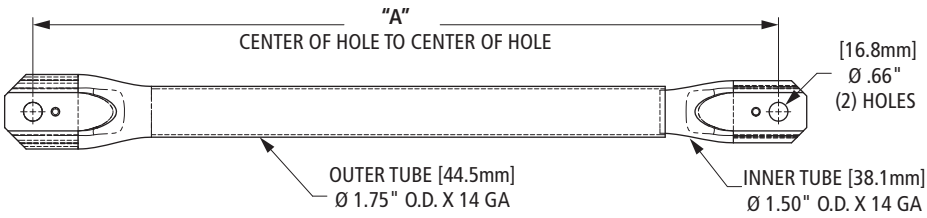

PART NO.	"A" [mm]	WEIGHT LBS. [kg]
50618006	26.00" [660.4] TO 41.00" [1041.4]	5.30 [2.40]
50618007	42.00" [1066.8] TO 57.00" [1447.8]	7.00 [3.18]
50618008	56.00" [1422.4] TO 72.00" [1828.8]	9.10 [4.13]

 Amendments and errors reserved. © SAF-HOLLAND, Inc.

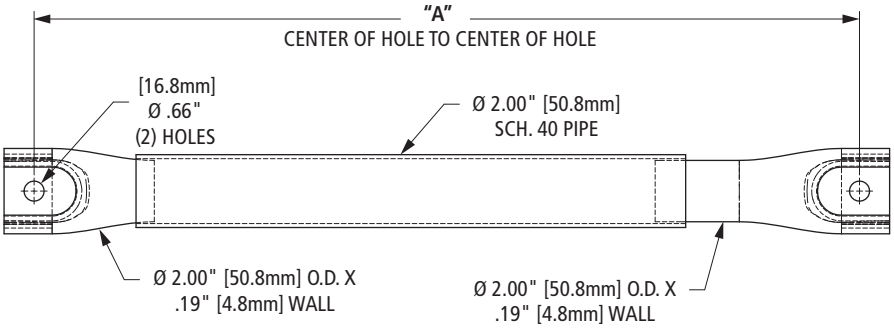

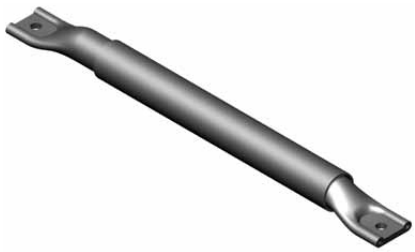

PART NO.	"A" [mm]	WEIGHT LBS. [kg]
50618009	26.00" [660.4] TO 41.00" [1041.4]	13.60 [6.17]
50618010	35.00" [889.0] TO 54.00" [1371.6]	18.10 [8.21]
50618011	56.00" [1422.4] TO 72.00" [1828.8]	25.20 [11.43]

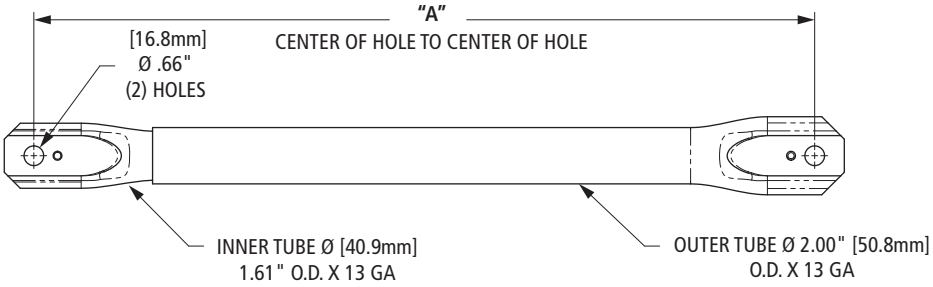

PART NO.	"A" [mm]	WEIGHT LBS. [kg]
50618012	26.00" [660.4] TO 41.00" [1041.4]	6.50 [2.95]
50618013	42.00" [1066.8] TO 57.00" [1447.8]	8.80 [3.99]
50618014	56.00" [1422.4] TO 72.00" [1828.8]	11.10 [5.03]

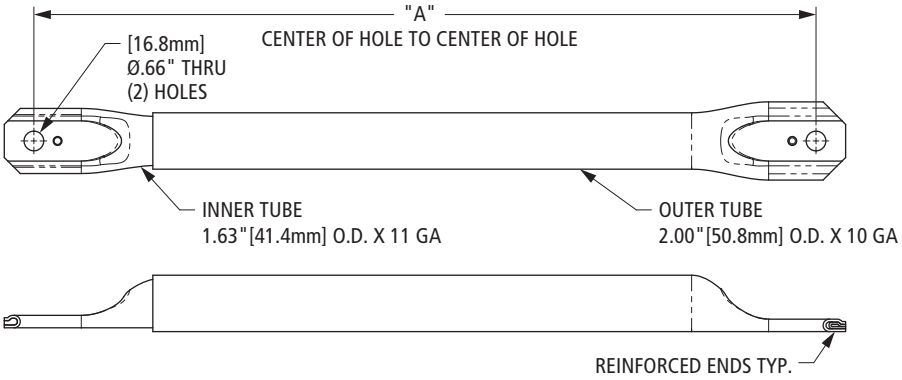

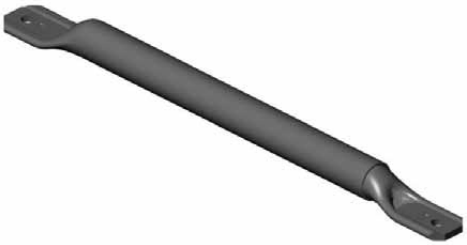

PART NO.	DESCRIPTION	"A" [mm]	WEIGHT IN LBS. [kg]
50618031	Brace, Med Duty ADJ 56-72"	56[1422.4] TO 72[1828.8]	14.60 [6.62]
50618030	Brace, Med Duty ADJ 42-57"	42[1066.8] TO 57[1447.8]	10.80 [4.90]
50618029	Brace, Med Duty ADJ 26-41"	26[660.4] TO 41[1041.4]	8.00 [3.63]

XL-AM10013PM-en-US Rev F 08-2014 Amendments and errors reserved. © SAF-HOLLAND, Inc.

Installation Kits

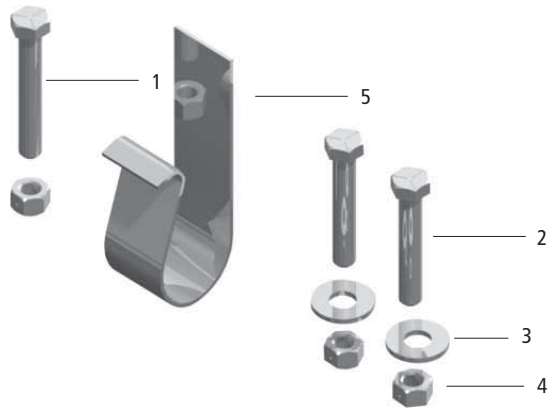

PART NO.	WEIGHT LBS [kg]
RK-V-06388	0.55 [0.25]

Replacement Parts

NO.	DESCRIPTION	PART NO.	QTY.	WEIGHT LBS [kg]
1	HHCS .38"-16 x 2.25"	XB-C-38-C-214	1	0.09 [0.04]
2	HHCS .38"-16 x 2.00"	XB-V-444-4	2	0.08 [0.04]
3	Washer .38"	XB-1108	2	0.02 [0.01]
4	Lock Nut .38"-16	XB-338	3	0.02 [0.01]
6	Crank Hanger	XB-LG0085	1	0.19 [0.09]

Binkley & Westran

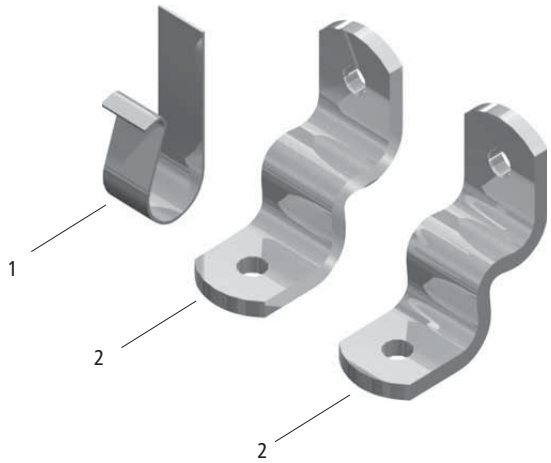

PART NO.	WEIGHT LBS [kg]
LG2789	3.15 [1.43]

Replacement Parts

NO.	DESCRIPTION	PART NO.	QTY.	WEIGHT LBS [kg]
1	Crank Hanger	XB-LG0085	1	0.19 [0.09]
2	Strut Bracket	LG0266	2	1.48 [0.67]

Mark V

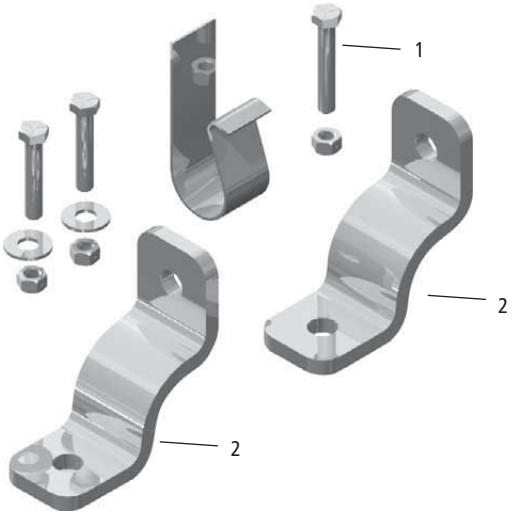

PART NO.	WEIGHT LBS [kg]
LG2790	3.50 [1.59]

Replacement Parts

NO.	DESCRIPTION	PART NO.	QTY.	WEIGHT LBS [kg]
1	Componentry Kit	RK-V-06388	1	0.55 [0.25]
2	Brace	XA-V-1938	2	1.44 [0.65]

 Amendments and errors reserved. © SAF-HOLLAND, Inc.

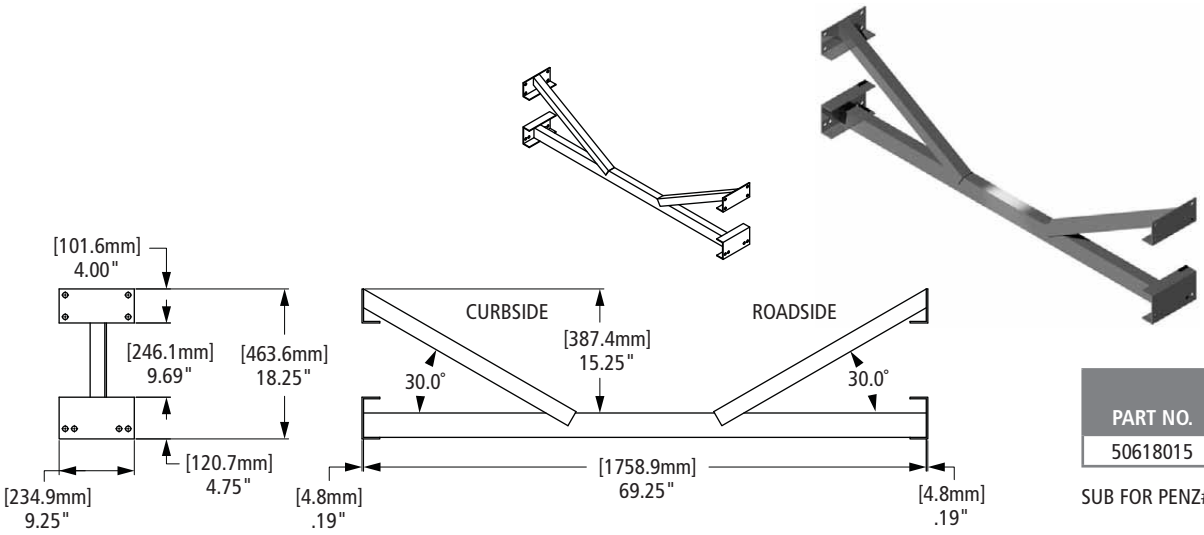

PART NO.	WEIGHT LBS [kg]
50618015	56.90 [25.81]

SUB FOR PENZ# 02-501-102

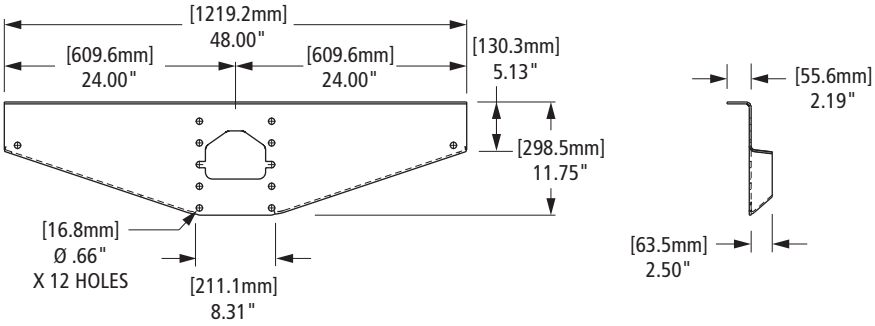

PART NO.	WEIGHT LBS [kg]
50618016	29.90 [13.56]

SUB FOR PENZ# 02-30, MILLER

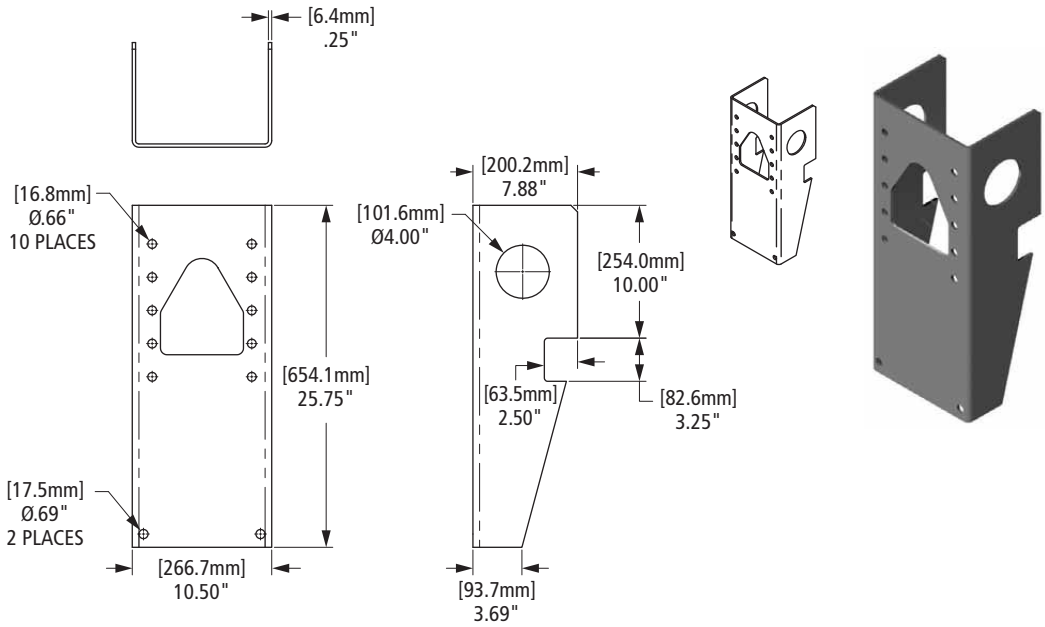

PART NO.	WEIGHT LBS [kg]
50618017	35.90 [16.28]

SUB FOR CHEETAH

XL-AM10013PM-en-US Rev F 08-2014 Amendments and errors reserved. © SAF-HOLLAND, Inc.

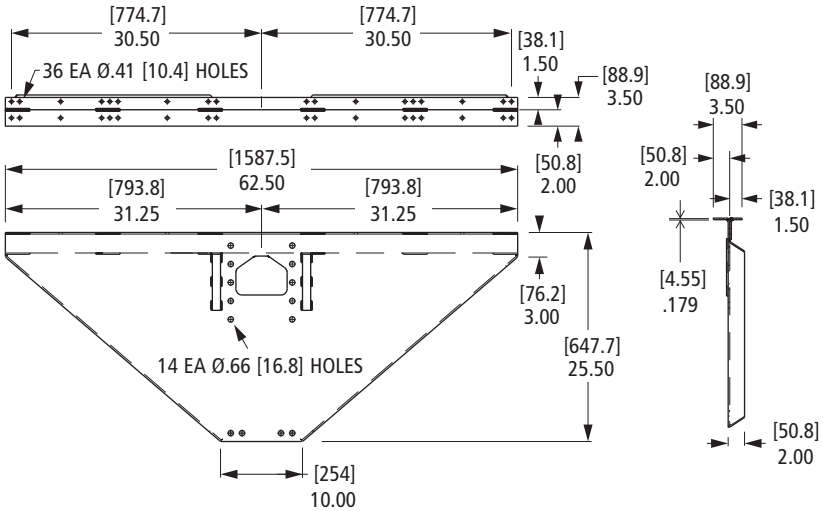

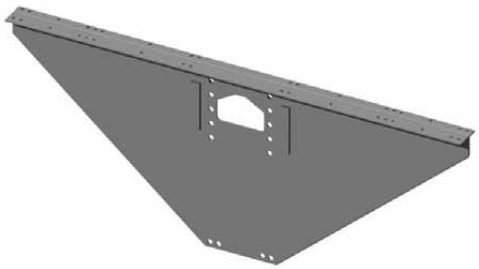

PART NO.	WEIGHT LBS [kg]
50618033	74.00 [33.37]

SUB FOR PENZ# 02-01

50618034

SUB FOR PENZ# 02-02-CS

50618035

SUB FOR PENZ# 02-02-RS

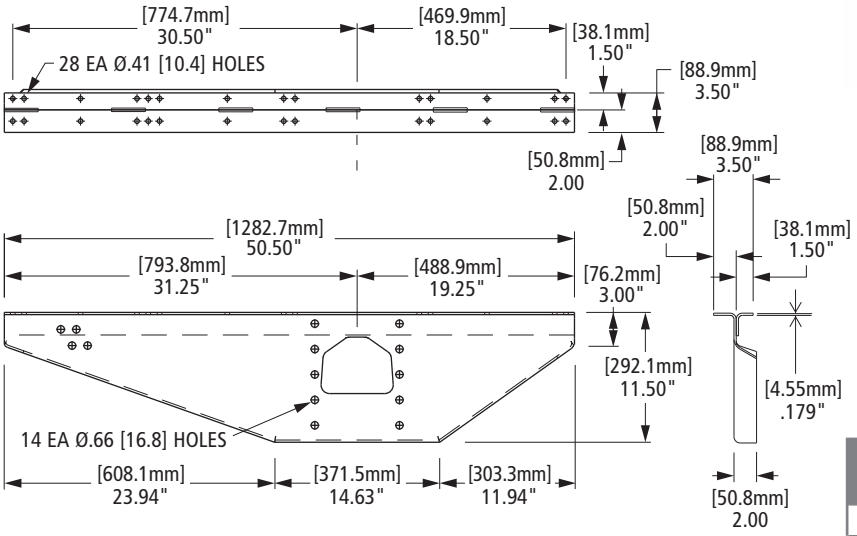

PART NO.	DESCRIPTION	WEIGHT LBS [kg]
50618034	Wing Bracket - Curbside	38.75 [17.58]
50618035	Wing Bracket - Roadside	38.75 [17.58]

 Amendments and errors reserved. © SAF-HOLLAND, Inc.

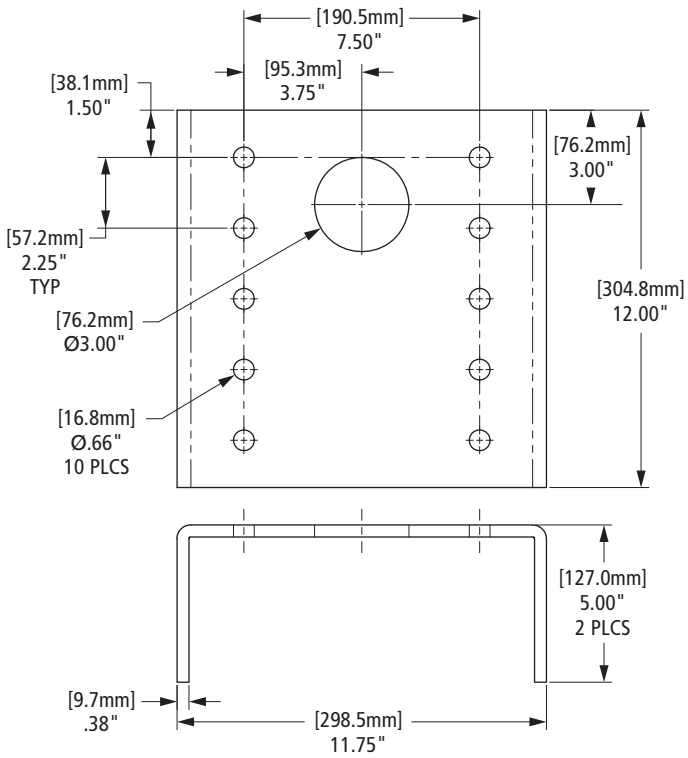

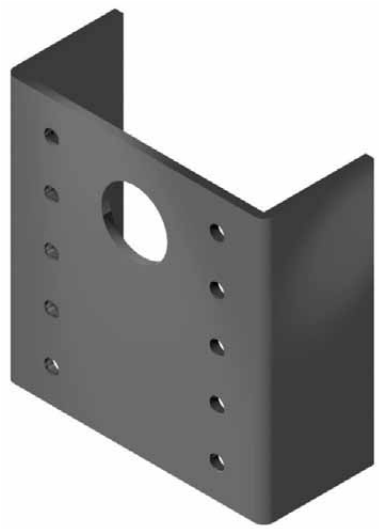

PART NO.	WEIGHT LBS [kg]
50618036	23.20 [10.52]

SUB FOR PENZ# 02-03

50618037

SUB FOR PENZ 02-07-RS

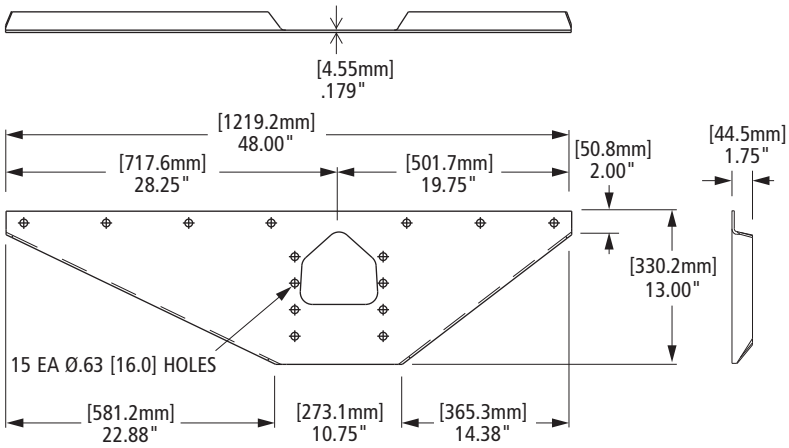

50618038

SUB FOR PENZ 02-07-CS

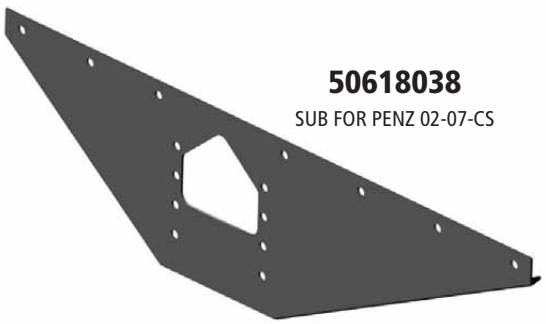

PART NO.	WEIGHT LBS [kg]
50618037	31.70 [14.38]
50618038	31.70 [14.38]

XL-AM10013PM-en-US Rev F 08-2014 Amendments and errors reserved. © SAF-HOLLAND, Inc.

SAF-HOLLAND Group

PART NUMBER	PAGE NO.
112001	2-9
112003	2-9
112005	2-9
112014	2-10
112015	2-10
112021	2-9
112023	2-9
112025	2-9
112030	2-9, 2-10
130000	1-45, 1-113
130001	1-45, 1-115
130002	1-45, 1-109
130003	1-45, 1-107
130004	1-45, 1-105
160000	1-45
180000	1-45, 1-88
180010	1-45, 1-93
180016	1-45, 1-96
201205	1-49
201208	2-10
716037	1-41
716039	1-41
716058	2-31
716059	2-31
724036	1-41
724037	1-41, 1-45
725001	1-41, 1-45
725002	1-41, 1-45
725003	1-41, 1-45
725046	1-41, 1-45, 1-49
727000	1-41, 1-45
728000	1-41
728003	1-13, 1-15, 1-21, 1-23, 1-41, 1-45, 1-49, 2-31
729002	1-41, 1-45
729108	1-41, 1-45
730005	2-45
730007	1-41, 1-45
730011	1-41, 1-107
730051	2-46
730052	2-46
730122	2-13
730157	2-44
730590	1-41, 1-104
730624	2-51
730637	2-31
730638	1-13, 1-15, 1-21, 1-23, 1-41, 1-45, 1-49, 2-31
730640	1-13, 1-15, 1-21, 1-23, 1-41, 1-45, 1-49, 2-31
741158	1-41

PART NUMBER	PAGE NO.
750002	1-41, 1-87
750004	1-41, 1-45, 1-77
750005	2-39
750009	1-41, 1-49, 1-109
750212	2-15
750241	1-41, 1-93
750245	1-41, 1-94
750450	1-41, 1-45, 1-82
750452	1-41, 1-45, 1-84
750812	2-13
751173	1-37, 1-41, 1-45, 1-49, 1-111
751174	1-41, 1-49, 1-113
751175	1-41, 1-45, 1-97, 1-102
751198	1-41, 1-45, 1-101
751407	2-15
751601	1-41
751612	1-41, 1-45
50616000	1-7, 1-9, 1-13, 1-15, 1-29, 1-31, 2-22
50616001	1-7, 1-9, 1-13, 1-15, 1-29, 1-31, 1-41, 1-45, 1-61, 1-63, 2-22
50616002	2-27
50616003	2-27
50616004	2-27
50616006	2-22
50616007	1-7, 1-9, 1-13, 1-15, 1-29, 1-31, 2-20
50616008	1-7, 1-9, 1-13, 1-15, 1-29, 1-31 1-41, 1-45, 1-63, 2-20
50616009	2-26
50616012	2-24
50616013	2-28
50616014	2-28
50616015	2-26
50616016	2-26
50616017	2-30
50616018	2-35
50616019	2-35
50616020	2-36
50616021	2-36
50616022	2-38
50616023	2-38
50616024	2-40

PART NUMBER	PAGE NO.
50616025	2-40
50616026	2-40
50616027	2-41
50616028	2-42
50616029	2-38
50616030	2-33
50616034	2-20
50616035	2-21
50616036	2-24
50616039	2-24
50616040	2-38
50616041	2-40
50616042	2-39
50616043	2-38
50616044	2-38
50618000	2-12
50618001	2-12
50618002	2-12
50618004	2-19
50618005	2-19
50618006	2-53
50618007	2-53
50618008	2-53
50618009	2-54
50618010	2-54
50618011	2-54
50618012	2-54
50618013	2-54
50618014	2-54
50618015	2-56
50618016	2-56
50618017	2-56
50618018	2-44
50618019	2-52
50618020	2-45
50618021	2-47
50618022	2-51
50618023	2-47
50618024	2-48
50618025	2-50
50618026	2-51
50618027	2-52
50618028	2-50
50618029	2-54
50618030	2-54
50618031	2-54
50618033	2-57
50618034	2-57
50618035	2-57
50618036	2-58
50618037	2-58
50618038	2-58
50618039	2-48
50618041	2-48

XL-LG11389PM-en-US Rev F 08-2014 Amendments and errors reserved. © SAF-HOLLAND, Inc.

PART NUMBER	PAGE NO.
50618042	2-49
50618043	2-49
50618046	2-19
50618047	2-46
50644000	2-3
50644001	2-4
50644002	2-3
50644003	2-4
50644004	2-3
50644005	2-4
50644006	2-3
50644007	2-4
50644008	2-3
50644009	2-4
50644010	2-3
50644011	2-4
50644013	2-6
50644014	2-6
50644015	2-6
50644016	2-6
50644017	2-6
50644018	2-6
50644019	2-6
50644020	2-6
50644021	2-6
50644022	2-6
50644023	2-6
50644031	2-11
50644032	2-11
50644033	2-11
50644034	2-11
50644035	2-11
50644036	2-7
50644037	2-7
50644047	2-4
50644048	2-4
50644049	2-4
50644050	2-3
50644051	2-3
50644052	2-3
2022100000180	1-13, 1-15
2022100000190	1-21, 1-23
2022300000020	1-21, 1-23
2024100000100	1-13, 1-15
2034160000150	1-21, 1-23
2034200000170	1-21, 1-23
2040100000050	1-13, 1-15, 1-17, 1-21, 1-23, 1-25, 1-110
2040100000060	1-13, 1-15, 1-17, 1-21, 1-23, 1-25, 1-112
2111100000430	1-17, 1-25, 1-76, 1-86

PART NUMBER	PAGE NO.
2111100000431	1-21, 1-23, 1-76, 1-86
2111100000440	1-17, 1-25, 1-82, 1-92
2111100000441	1-21, 1-23, 1-82, 1-92
2111100000450	1-17, 1-25, 1-84, 1-95
2111100000451	1-21, 1-23, 1-84, 1-95
2111100000460	1-17, 1-25. 1-79, 1-89
2111100000461	1-21, 1-23, 1-79, 1-89
2111100000470	1-17, 1-25, 1-79, 1-89
2111100000471	1-21, 1-23, 1-25, 1-79, 1-89
2111100000480	1-17, 1-23, 1-25
2111100000481	1-21
2111100000490	1-17, 1-23, 1-25
2111100000491	1-21
2111100000500	1-17, 1-23, 1-25
2111100000501	1-21
2111100000510	1-17, 1-23, 1-25
2111100000511	1-21
2111100000520	1-17, 1-23, 1-25
2111100000521	1-21
2111100000530	1-21, 1-23
2111100003400	1-13, 1-15, 1-21, 1-23
2111100003410	1-13, 1-15, 1-21, 1-23
2111100003420	1-13, 1-15, 1-21, 1-23
2111100004080	1-13, 1-15
2111200000130	1-21
2111200000140	1-21
2111200000150	1-21
2111200000160	1-21
2111200000170	1-21
2111200000230	1-21
2111200000240	1-21
2111200000250	1-21
2111200000260	1-21
2111200000870	1-23
2111200000880	1-23
2111200000890	1-23
2111200000900	1-23
2111200000910	1-23
2111200000970	1-23
2111200000980	1-23
2111200000990	1-23
2111200001000	1-23
2111200002480	1-21
2111200002490	1-21
2111200002500	1-21
2111200002510	1-21
2111200002520	1-21
2111200002530	1-23
2111200002540	1-23
2111200002550	1-23
2111200002560	1-23
2111200002570	1-23

PART NUMBER	PAGE NO.
LG0043-01	2-33
LG0044-01	2-33
LG0045-01	2-33
LG0048-01	2-32
LG0048-10	2-32
LG0050	1-21, 1-23, 1-35, 1-37, 1-53, 2-25
LG0051	1-21, 1-23, 1-35, 1-37, 1-53, 2-23
LG0055	1-21, 1-23, 1-35, 1-37, 1-49, 2-25
LG0055-01	1-21, 1-23, 2-23
LG0056	1-21, 1-23, 1-35, 1-37, 1-49, 1-53
LG0056-02	1-21, 1-23, 2-21
LG0063-10	2-42
LG0065	1-21, 1-23
LG0065-01	1-21, 1-23
LG0065-02	1-21, 1-23
LG0065-03	2-23
LG0065-04	1-21, 1-23
LG0068	2-33
LG0070-02	1-7, 1-9, 1-13, 1-15, 1-21, 1-23, 1-29, 1-31, 1-35, 1-37, 1-41, 1-45, 1-49, 1-61, 1-63, 2-33
LG0070-04	2-38
LG0074	2-29
LG0078	2-29
LG0078-01	2-29
LG0083-01	1-10, 1-18, 1-26, 1-32, 1-38, 1-64, 2-2
LG0083-02	2-2
LG0083-02-GPC-PK	2-2
LG0083-02-GREY-PC	2-2
LG0083-03	1-10, 1-18, 1-26, 1-32, 1-38, 1-64, 2-2
LG0083-04	2-2
LG0083-05	1-10, 1-18, 1-26, 1-32, 1-38, 1-64, 2-2
LG0083-06	2-2
LG0083-07	2-2
LG0083-08	2-2
LG0083-09	2-2
LG0083-10	2-2
LG0083-11	2-2
LG0083-12	2-2
LG0091-#	2-53
LG0094	2-19
LG0094-XXXX	1-41, 1-45, 1-49, 2-19
LG0100	2-18
LG0122	21, 23
LG0123	2-33
LG0124	2-33
LG0127-10	1-9
LG0172	2-14

 Amendments and errors reserved. © SAF-HOLLAND, Inc.

PART NUMBER	PAGE NO.
LG0177	1-70
LG0189-01	1-61, 1-85
LG0204-01	2-40
LG0204-04	2-40
LG0204-05	2-40, 2-42
LG0204-06	2-40
LG0204-07	2-40
LG0204-08	2-40
LG0216	2-18
LG0222-01	2-18
LG0223	2-18
LG0259	1-29, 1-31, 1-77
LG0260	1-29, 1-31, 1-87
LG0261-01	1-7, 1-29, 1-61, 1-96
LG0264	1-29, 1-31
LG0266	1-72, 2-44, 2-55
LG0369-01	1-29, 1-31, 1-80
LG0369-05	1-29, 1-31, 1-82
LG0370-01	1-29, 1-31, 1-90
LG0370-05	1-29, 1-31, 1-92
LG0371-01	1-7, 1-29, 1-99, 1-100
LG0436	1-29, 1-31, 1-84
LG0437	1-7, 1-29, 1-103
LG0438	1-29, 1-31, 1-94
LG0473	2-34
LG0474	2-34
LG0475	2-34
LG0475-01	2-34
LG0475-03	2-34
LG0524-01	2-53
LG0525-01	2-53
LG0527	2-34
LG0531-02	1-29, 1-31, 1-106
LG0541-01	1-7, 1-29, 1-61, 1-113
LG0543-01	1-7, 1-9, 1-29, 1-31, 1-61, 1-108
LG0559-10	1-9, 1-31, 1-37
LG0569	1-29
LG0569-01	1-29
LG0569-02	1-29
LG0569-04	1-29
LG0569-20	1-31
LG0569-21	1-31
LG0569-22	1-31
LG0573	1-34
LG0574-01	1-29
LG0574-02	1-29
LG0574-04	1-29
LG0574-05	1-29
LG0574-21	1-31
LG0574-22	1-31
LG0574-24	1-31

PART NUMBER	PAGE NO.
LG0574-25	1-31
LG0580-01	1-29
LG0580-02	1-29
LG0580-03	1-29
LG0580-05	1-29
LG0580-22	1-31
LG0580-23	1-31
LG0580-24	1-31
LG0590	1-66
LG0646-#	2-53
LG0659	1-49
LG0659-10	1-13, 1-15, 1-21, 1-23, 1-63
LG0663	1-7, 1-29, 1-61
LG0663-10	1-9
LG0663-11	1-9, 1-31
LG0711	2-33
LG0714	2-33
LG0718-01	1-7, 1-9, 1-13, 1-15, 1-35, 1-37, 2-33
LG0725	1-7, 1-9, 1-13, 1-15, 1-29, 1-31, 1-35, 1-37, 2-32, 2-33
LG0730-01	2-33
LG0732-01	1-7, 1-9, 1-13, 1-15, 1-29, 1-31, 1-35, 1-37, 2-32
LG0732-02	2-32
LG0740-01	1-7, 1-9, 1-13, 1-15, 1-35, 1-37, 2-33
LG0747-504	1-29
LG0747-505	1-29
LG0818	2-30
LG0827	1-61, 1-63
LG0827-01	1-61, 1-63
LG0858	1-9, 1-31, 1-103
LG0859-01	1-9, 1-31, 1-99, 1-100
LG0861-01	1-9, 1-31, 1-97
LG0927	1-7, 1-9, 1-35, 1-37, 1-61, 1-76
LG0928	1-7, 1-9, 1-61, 1-86
LG0936-51	1-35, 1-37, 1-108
LG0944-10	1-37
LG0944-100	1-35
LG0946	1-7, 1-9, 1-35, 1-37, 1-78
LG0946-02	1-7, 1-9, 1-35, 1-37, 1-81
LG0947	1-7, 1-9, 1-88
LG0947-02	1-7, 1-9, 1-91
LG0948	1-7, 1-9, 1-35, 1-37, 1-83
LG0949	1-7, 1-9, 1-95
LG1326	1-9, 1-31, 1-37
LG1367-10	1-9, 1-31, 1-37
LG1468	1-68

PART NUMBER	PAGE NO.
LG1578	2-49
LG1720-10	1-66
LG1720-40	1-66
LG1721	1-66
LG1723-01	1-66
LG1723-02	1-66
LG1815-05	1-21, 1-23
LG1823-02	1-13, 1-15, 1-21, 1-23, 1-49, 1-63, 1-106
LG1829	1-53, 2-32
LG1871	1-70
LG1872	1-71
LG1872-03	1-71
LG1874-01	1-71
LG1874-03	1-71
LG1877	1-70
LG1879	1-71
LG1899	1-66
LG1973-50	1-74
LG2003	1-58
LG2003-01	1-58
LG2023	2-15
LG2024	1-58
LG2032	1-58
LG2032-01	1-58
LG2033	1-58
LG2066	2-42
LG2094	1-7, 29, 35, 1-61
LG2095	1-7, 29, 35, 1-61
LG2130-01	2-8
LG2130-02	2-8
LG2130-03	2-8
LG2130-04	2-8
LG2130-05	2-8
LG2130-06	2-8
LG2130-07	2-8
LG2130-08	2-8
LG2130-09	2-8
LG2130-11	2-8
LG2145-999	35
LG2147	35, 37, 87
LG2151	72
LG2151-101	72
LG2153	72
LG2153-102	72
LG2187	35, 37, 90
LG2187-01	35, 37, 92
LG2197	35, 37, 94
LG2314	1-61, 1-63, 1-66
LG2328	1-58, 1-66, 1-68, 1-78
LG2329	1-58, 1-66, 1-68
LG2334	2-46

XL-LG11389PM-en-US Rev F 08-2014 Amendments and errors reserved. © SAF-HOLLAND, Inc.

PART NUMBER	PAGE NO.
LG2392-01	1-66
LG2392-02	1-68
LG2392-03	1-58
LG2427	2-42
LG2462	1-35, 1-37, 2-17
LG2462-01	2-17
LG2462-02	2-17
LG2462-03	2-17
LG2463-01	1-35, 1-37, 1-110
LG2464-01	1-35, 1-37, 1-111
LG2465-01	1-35, 1-37, 1-112
LG2536	2-50
LG2589	2-39
LG2596	1-74
LG2601	1-74
LG2602	1-74
LG2605	1-74
LG2727	2-33
LG2744-21	1-31
LG2744-22	1-31
LG2789	2-55
LG2790	2-55
LG2884	1-13, 1-15, 1-21, 1-23, 1-49, 1-63, 1-104
LG2926	1-49, 1-63
LG2926-10	1-13, 1-15
LG3071-05	1-15
LG3077-01	1-15
LG3077-02	1-15
LG3077-03	1-15
LG3077-04	1-15
LG3095-01	1-15
LG-3095-02	1-15
LG3095-03	1-15
LG3095-04	1-15
LG3095-05	1-15
LG3095-06	1-15
LG3097-01	1-13
LG3097-02	1-13
LG3097-03	1-13
LG3097-11	1-15
LG3097-12	1-15
LG3097-13	1-15
LG-741158	1-49
LG-742913	1-49
LG-742927	1-49
LG-750002-01	1-49, 1-87
LG-750002-02	1-49, 1-93
LG-750002-03	1-49, 1-94
LG-750002-04	1-49, 1-90
LG-750002-05	1-49
LG-750004-01	1-49, 1-77
LG-750004-02	1-49, 1-83

PART NUMBER	PAGE NO.
LG-750002-03	1-49, 1-94
LG-750002-04	1-49, 1-90
LG-750002-05	1-49
LG-750004-01	1-49, 1-77
LG-750004-02	1-49, 1-83
LG-750004-03	1-49, 1-85
LG-750004-04	1-49, 1-80
LG-750004-05	1-49, 1-81
LG-751175-01	1-49, 1-98
LG-751175-02	1-49, 1-101
LG-751175-03	1-49, 1-102
RK-10919	1-29, 1-31, 1-49, 1-53, 1-58, 1-61, 1-63, 1-66, 1-68
RK-10980	1-115
RK-11074-01	1-35
RK-11284	1-29
RK-11285	1-29
RK-11286	1-53
RK-11287	1-53
RK-11288	1-7
RK-11289	1-7
RK-11290	1-41
RK-11291	1-41
RK-11321	1-45
RK-11322	1-45
RK-11442	1-63
RK-11443	1-63
RK-11488	1-49
RK-11489	1-49
RK-11682	1-20, 1-22
RK-11683	1-20, 1-22
RK-V-024	2-32
RK-V-06388	2-55
RK-V-07602-1	2-16
RK-V-07602-2	2-16
RK-V-07780	1-53
RK-V-07781	1-53
RK-V-1997-1	1-53, 2-16
RK-V-1997-2	1-53, 2-16
XA-02154	1-73
XA-04681	2-21
XA-60024	2-13
XA-C-375-C-125	1-73
XA-CRP-06635	1-53
XA-CRP-V-06633	1-53
XA-CRP-V-06634	1-53
XA-CRP-V-06635	1-7, 1-9, 1-13, 1-15, 1-17, 1-21, 1-23, 1-25, 1-29, 1-31, 1-35, 1-37, 1-49, 1-53, 1-61, 1-63, 1-73
XA-H-06628-000-0	1-54
XA-H-06628-010-1	1-54
XA-H-06628-010-5	1-54

PART NUMBER	PAGE NO.
XA-H-06628-020-2	1-54
XA-H-06628-101-0	1-54
XA-H-06628-111-1	1-54
XA-H-06628-111-5	1-54
XA-H-06628-121-2	1-54
XA-H-06628-202-0	1-54
XA-H-06628-212-1	1-54
XA-H-06628-212-5	1-54
XA-H-06628-222-2	1-54
XA-H-06628-303-0	1-54
XA-H-06628-313-1	1-54
XA-H-06628-313-5	1-54
XA-H-06628-323-2	1-54
XA-H-06628-404-0	1-54
XA-H-06628-413-2	1-54
XA-H-06628-414-1	1-54
XA-H-06628-414-5	1-54
XA-H-06628-505-0	1-54
XA-H-06628-514-2	1-54
XA-H-06628-515-1	1-54
XA-H-06628-515-5	1-54
XA-HV-796	1-53
XA-LG0570-01	1-7, 1-9, 1-29, 1-31, 1-35, 1-37, 1-61, 1-104
XA-LG0880	1-7, 1-9, 1-35, 1-37, 1-49, 1-58, 1-61, 1-63, 1-66, 1-68, 1-72
XA-S03010	2-28
XA-V-06618	1-53
XA-V-06600	1-53, 1-73, 1-107
XA-V-06601	1-53, 1-73, 1-105
XA-V-06602	1-53, 1-115
XA-V-06603	1-53, 1-109
XA-V-06604-1	1-53, 1-111
XA-V-06606	1-53, 1-113
XA-V-06611	1-53
XA-V-06623-A	1-53, 1-77
XA-V-06623-B	1-53, 1-85
XA-V-06623-C	1-53, 1-83
XA-V-06623-D	1-53, 1-80
XA-V-06623-F	1-53, 1-81
XA-V-06624-A	1-53, 1-88
XA-V-06624-C	1-53, 1-93, 1-96
XA-V-06624-D	1-53, 1-90
XA-V-06624-F	1-53, 1-91
XA-V-06625-A	1-53, 1-98
XA-V-06625-B	1-53, 1-102
XA-V-06625-C	1-53, 1-99, 1-101
XA-V-06625-F	1-53, 1-100
XA-V-06628-000-0	1-54
XA-V-06628-010-1	1-54

 Amendments and errors reserved. © SAF-HOLLAND, Inc.

SAF-HOLLAND Group

PART NUMBER	PAGE NO.
XA-V-06628-010-5	1-54
XA-V-06628-020-2	1-54
XA-V-06628-101-0	1-54
XA-V-06628-111-1	1-54
XA-V-06628-111-5	1-54
XA-V-06628-121-2	1-54
XA-V-06628-202-0	1-54
XA-V-06628-212-1	1-54
XA-V-06628-212-5	1-54
XA-V-06628-222-2	1-54
XA-V-06628-303-0	1-54
XA-V-06628-313-1	1-54
XA-V-06628-313-5	1-54
XA-V-06628-323-2	1-54
XA-V-06628-404-0	1-54
XA-V-06628-413-2	1-54
XA-V-06628-414-1	1-54
XA-V-06628-414-5	1-54
XA-V-06628-505-0	1-54
XA-V-06628-514-2	1-54
XA-V-06628-515-1	1-54
XA-V-06628-515-5	1-54
XA-V-06629	1-53
XA-V-07085	1-53
XA-V-07601-1	1-53, 2-16
XA-V-07601-2	1-53, 2-16
XA-V-07602-1	1-53
XA-V-07602-2	1-53
XA-V-07954	1-73
XA-V-07957	1-73
XA-V-1875-10	1-73
XA-V-1901-1	1-53
XA-V-1901-2	1-39
XA-V-1901-3	1-39
XA-V-1903-1	1-53, 2-40
XA-V-1903-2	2-40
XA-V-1903-3	2-40
XA-V-1916	1-53, 2-16
XA-V-1916-1	1-53, 2-16
XA-V-1938	1-53, 2-45, 2-55
XA-V-298-01	74
XA-V-319	2-43
XA-V-346	2-43
XA-V-349	2-43
XA-V-350	2-43
XA-V-350-R	2-43
XA-V-630-2	1-53, 2-14, 2-16
XA-V-77070	1-73
XA-V-77071	1-73
XA-V-796-RCF	1-53, 2-32
XA-V-796-WS	1-53
XA-V-90-0	2-5
XA-V-90-1	2-5
XA-V-90-2	2-5

PART NUMBER	PAGE NO.
XA-V-90-3	2-5
XA-V-90-4	2-5
XA-V-90-5	2-5
XA-V-90-6	2-5
XA-V-90-7	2-5
XA-V-90-8	2-5
XA-V-90-10	2-5
XA-V-90-11	2-5
XA-V-90-12	2-5
XA-V-90-13	2-5
XA-V-90-146	2-5
XA-V-90-161	2-5
XA-V-971	1-53, 2-14, 2-16
XB-01789	1-53
XB-03695	1-74, 2-43
XB-03857	1-74, 2-43
XB-03858	74
XB-04523	2-16
XB-04676	2-34
XB-06179-2	1-53, 2-32
XB-06372	1-53
XB-07618	1-53, 2-16
XB-1108	2-43, 2-55
XB-21-S-218-1500	1-53
XB-21-S-375-1500	2-16
XB-21-S-375-3000	1-53, 1-73, 2-40
XB-248-A	2-43
XB-3103	1-53, 2-16
XB-338	1-53, 1-73, 2-16, 2-55
XB-767	1-53, 1-73
XB-767-L	1-53, 1-73
XB-BAL-023-01	1-53
XB-BAL-023-07	1-7, 1-9, 1-29, 1-31, 1-35, 1-37, 1-61
XB-BRG-013-70	1-58, 1-66, 1-68, 1-74
XB-BRG-013-77	1-7, 1-9, 1-13, 1-15, 1-21, 1-23, 1-29, 1-31, 1-35, 1-37, 1-49, 1-61, 1-63
XB-C-38-C-214	2-55
XB-CP4647-10	1-70
XB-CP4651-16	1-58, 1-66, 1-68, 2-14
XB-DCL-031-60	1-58
XB-DCL-031-66	1-70
XB-DCL-031-67	1-9, 1-31, 1-37
XB-DCL-031-79	1-66
XB-GP-014-07	1-7, 1-29, 1-58, 1-61, 1-66, 1-68, 1-74
XB-GP-014-18	1-13, 1-15, 1-17, 1-21, 1-23, 1-25, 1-49, 1-63
XB-GP-052-21	1-13, 1-15, 1-17, 1-21, 1-23, 1-25, 1-63
XB-GP-052-22	1-9, 1-31
XB-GP-052-43	2-11

PART NUMBER	PAGE NO.
XB-GP-052-49	1-35, 1-37
XB-GP-052-52	1-13, 1-15, 1-17, 1-21, 1-23
XB-GP-38-1-12-E	1-53, 1-73
XB-GP-38-138-5	1-53
XB-GRF-022-16	1-7, 1-13, 1-15, 1-21, 1-29, 1-35, 1-49, 1-58, 1-61, 1-63, 1-66,1-68,1-74
XB-HHB-050-58	1-19, 1-21, 1-23, 2-33
XB-HHB-050-70	1-7, 1-9, 1-13, 1-15, 1-29, 1-31, 1-35, 1-37, 2-32, 2-33
XB-HHC-001-40	1-70
XB-HHC-050-114	1-53
XB-HHC-050-42	1-7, 1-9, 1-13, 1-15, 1-17, 1-21, 1-23, 1-25, 1-29, 1-31, 1-35, 1-37, 1-41, 1-45, 1-49, 1-58, 1-61, 1-63, 1-66, 1-68, 1-74
XB-HHC-050-65	2-42
XB-HHC-050-69	1-7, 1-9, 1-13, 1-15, 1-21, 1-23, 1-29, 1-31, 1-35, 1-37, 1-41, 1-45, 1-49, 1-61, 1-63, 1-74, 2-31, 2-38
XB-HHC-050-87	2-18
XB-HHC-050-114	2-32
XB-HTP-014-69	1-72
XB-KEY-018-02	1-7, 1-9, 1-29, 1-31, 1-35, 1-37, 1-61
XB-LG0085	1-53, 2-55
XB-LG0219-01	1-7, 1-9, 1-29, 1-31, 1-61
XB-LG0219-02	1-9, 1-31, 1-37
XB-LG0413	1-29, 1-31
XB-LG0428	1-7, 1-9, 1-29, 1-31, 1-61
XB-LG0472	2-34
XB-LG0542-01	1-7, 1-9, 1-29, 1-31, 1-61, 1-114
XB-LG0544	1-7, 1-9, 1-13, 1-15, 1-21, 1-23, 1-29, 1-31, 1-35, 1-37, 1-49, 1-61, 1-63
XB-LG0559	1-53, 1-73
XB-LG0658-01	1-7, 1-9, 1-29, 1-31, 1-35, 1-37, 1-61
XB-LG0659-01	1-7, 1-9, 1-29, 1-31, 1-35, 1-37, 1-61
XB-LG0660	1-7, 1-9, 1-29, 1-31, 1-61
XB-LG0663	1-7, 1-29, 1-61
XB-LG0713	1-21, 1-23, 1-53, 2-32, 2-33
XB-LG0726	1-7, 1-9, 1-13, 1-15, 1-29, 1-31, 1-35, 1-37, 2-32, 2-33
XB-LG0857-01	1-9, 1-31, 1-110
XB-LG0891	1-35, 1-37

XL-LG11389PM-en-US Rev F 08-2014 Amendments and errors reserved. © SAF-HOLLAND, Inc.

PART NUMBER	PAGE NO.
XB-LG0893	1-7, 1-9, 1-35, 1-37, 1-49, 1-58, 1-61, 1-63, 1-66, 1-68, 1-72
XB-LG0931	1-35, 1-37
XB-LG1460	1-58, 1-66, 1-68
XB-LG1570	1-9, 1-31, 1-37, 1-53, 1-73
XB-LG1823-01	1-7, 1-9, 1-35, 1-37, 1-61, 1-106
XB-LG2006	1-58
XB-LG2026	1-58, 1-66, 1-68, 1-107
XB-LG2027	1-58, 1-66, 1-68, 1-105
XB-LKP-014-100	1-72
XB-PW-016-03	1-7, 1-9, 1-13, 1-15, 1-17, 1-21, 1-23, 1-25, 1-29, 1-31, 1-35, 1-37, 1-61, 1-63, 1-74, 2-10, 2-43
XB-PW-016-13	1-41, 1-45
XB-PW-016-19	1-7, 1-9, 1-29, 1-31, 1-35, 1-37, 1-61
XB-PW-016-51	1-58, 1-66, 1-68
XB-PW-016-62	1-7, 1-9, 1-13, 1-15, 1-21, 1-23, 1-29, 1-31, 1-35, 1-37, 1-41, 1-45, 1-49, 1-61, 1-63
XB-PW-016-88	1-74
XB-SEL-030-17	1-9, 1-31, 1-35, 1-37, 1-49
XB-SEL-030-18	1-37
XB-SEL-030-22	1-9, 1-31
XB-SLN-012-04	1-7, 1-9, 1-13, 1-15, 1-17, 1-21,1- 23,1-25, 1-29, 1-31, 1-35, 1-37, 1-41, 1-45, 1-49, 1-58, 1-61, 1-63, 1-66, 1-68, 1-74, 2-10, 2-18, 2-31, 2-38, 2-42, 2-43
XB-SLN-012-07	1-70
XB-SP0012-10	1-7, 1-9, 1-13, 1-15, 1-21, 1-23, 1-29, 1-31, 1-35, 1-37, 2-32, 2-33
XB-SP-014-27	1-7, 1-9, 1-21, 1-23, 1-29, 1-31, 1-35, 1-37, 1-49, 1-58, 1-61, 1-66, 1-68
XB-SPG-020-02	1-53
XB-SPG-020-26	1-66
XB-SPG-020-36	1-7, 1-9, 1-29, 1-31, 1-35, 1-37, 1-61
XB-STS-008-11	1-7, 1-9, 1-13, 1-15, 1-21, 1-23, 1-29, 1-31, 1-35, 1-37, 1-41, 1-45, 1-49, 1-58, 1-61, 1-63, 1-66, 1-68, 1-72

PART NUMBER	PAGE NO.
XB-STS-008-17	1-58, 1-61, 1-63, 1-66, 1-74
XB-V-06621	1-53
XB-V-06629	1-73
XB-V-06630	1-53, 1-73
XB-V-06632	1-53, 1-73
XB-V-07054	1-53
XB-V-1915	1-53, 2-16
XB-V-315-1	2-43
XB-V-348	2-43
XB-V-444-4	1-53, 2-16, 2-55
XB-V-647	1-53, 1-73
XB-V-647-1	1-53
XB-V-747-HD-1	1-73, 2-42
XB-V-851	2-16
XB-WHL-026-11	2-42, 2-43
XD-LG0856	1-9, 1-31, 1-112
XL-LG303	2-16
XL-LG375	2-10

 Amendments and errors reserved. © SAF-HOLLAND, Inc.

 Amendments and errors reserved. © SAF-HOLLAND, Inc.

 Amendments and errors reserved. © SAF-HOLLAND, Inc.

YOUR COMPLETE SOURCE FOR COMMERCIAL VEHICLE PRODUCT SOLUTIONS

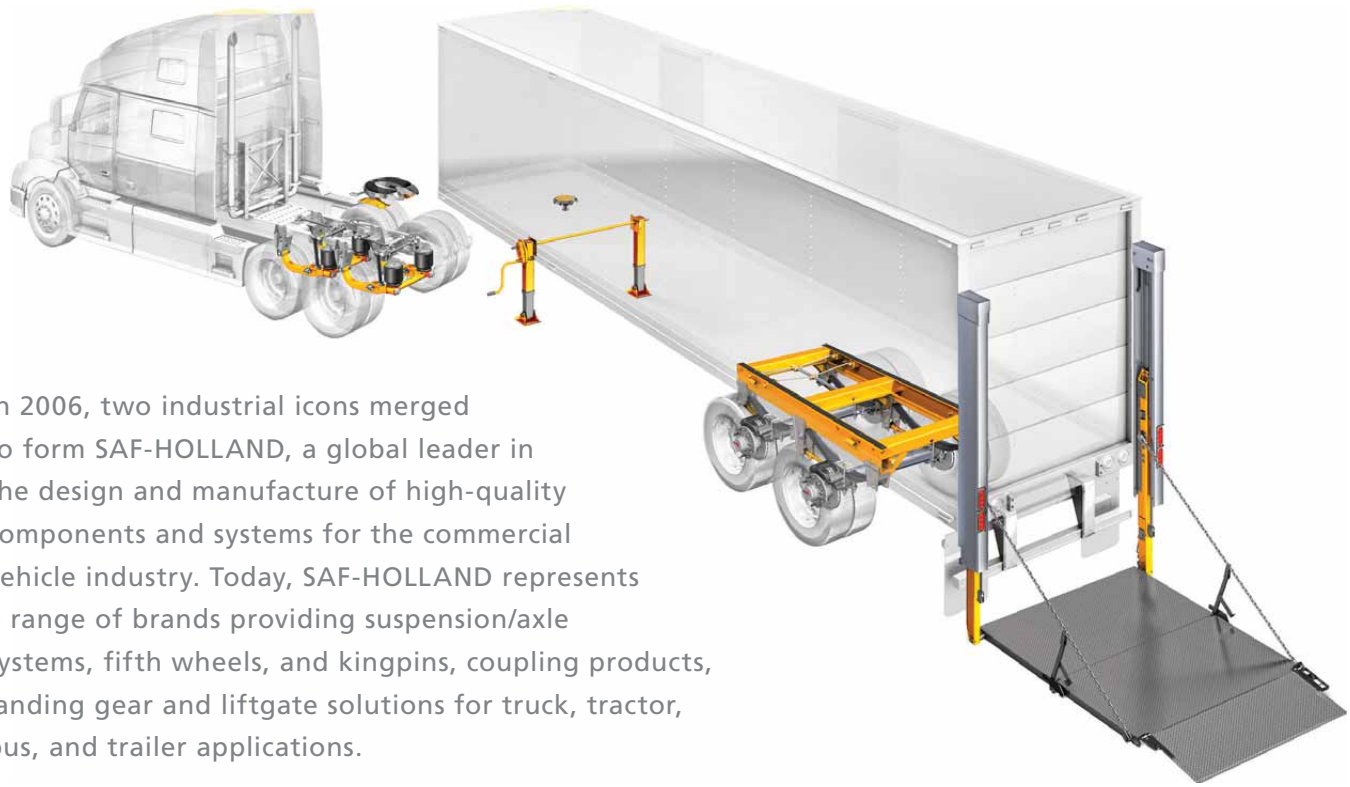

In 2006, two industrial icons merged to form SAF-HOLLAND, a global leader in the design and manufacture of high-quality components and systems for the commercial vehicle industry. Today, SAF-HOLLAND represents a range of brands providing suspension/axle systems, fifth wheels, and kingpins, coupling products, landing gear and liftgate solutions for truck, tractor, bus, and trailer applications.

Holland®
SAF-HOLLAND Group

- FIFTH WHEELS
- LANDING GEAR
- KINGPINS
- COUPLINGS
- LIFTGATES

SAF
SAF-HOLLAND Group

- MECHANICAL SUSPENSION/ AXLE SYSTEMS
- TRAILER AXLES/BRAKES
- AIR-RIDE SUSPENSION/ AXLE SYSTEMS

NEWAY®
SAF-HOLLAND Group

- SEVERE-DUTY VOCATIONAL AIR-RIDE SUSPENSIONS
- BUS AIR-RIDE SUSPENSIONS
- STEER AIR-RIDE SUSPENSIONS

SAF holland

www.safholland.com

From fifth wheel rebuild kits to suspension bushing repair kits, SAF-HOLLAND Original Parts are the same quality components used in the original component assembly.

SAF-HOLLAND Original Parts are tested and designed to provide maximum performance and durability. Will-fits, look-alikes or worse yet counterfeit parts will only limit the performance potential and could possibly void SAF-HOLLAND's warranty. Always be sure to spec SAF-HOLLAND Original Parts when servicing your SAF-HOLLAND product.

SAF-HOLLAND USA • 800.876.3929 • Fax 800.356.3929
www.safholland.us

SAF-HOLLAND CANADA • 519.537.3494 • Fax 800.565.7753
WESTERN CANADA • 604.574.7491 • Fax 604.574.0244
www.safholland.ca

SAF-HOLLAND MEXICO • +(52) 55.5362.8743 • Fax +(52) 55.5362.8743
www.safholland.com.mx

info@safholland.com

XL-LG11389PM-en-US Rev F 08-2014 · Amendments and errors reserved. © SAF-HOLLAND, Inc.

SAF-HOLLAND USA, INC.
1950 Industrial Blvd, Muskegon, MI 49442
www.safholland.com

Engineering Your Road to Success